HITACHI

For Messrs : Atlinks

Date : Aug. 4, 2000

CUSTOMER'S ACCEPTANCE SPECIFICATIONS

SX19V007-Z2A

CONTENTS

No.	ITEM	Sheet No.	Page
1	COVER	3284PS 2701 - SX19V007-Z2A - 3	1-1/1
2	RECORD OF REVISION	3284PS 2702 - SX19V007-Z2A - 3	2-1/1
3	MECHANICAL DATA	3284PS 2703 - SX19V007-Z2A - 3	3-1/1
4	ABSOLUTE MAXIMUM RATINGS	3284PS 2704 - SX19V007-Z2A - 3	4-1/1
5	ELECTRICAL CHARACTERISTICS	3284PS 2705 - SX19V007-Z2A - 3	5-1/3~ 5-3/3
6	OPTICAL CHARACTERISTICS	3284PS 2706 - SX19V007-Z2A - 3	6-1/3~ 6-3/3
7	BLOCK DIAGRAM	3284PS 2707 - SX19V007-Z2A - 3	7-1/1
8	INTERFACE TIMING CHART	3284PS 2708 - SX19V007-Z2A - 3	8-1/6~ 8-6/6
9	DIMENSIONAL OUTLINE	3284PS 2709 - SX19V007-Z2A - 3	9-1/2~ 9-2/2
10	APPEARANCE STANDARD	3284PS 2710 - SX19V007-Z2A - 3	10-1/4~ 10-4/4
11	PRECAUTION IN DESIGN	3284PS 2711 - SX19V007-Z2A - 3	11-1/4~ 11-4/4
12	DESIGNATION OF LOT MARK	3284PS 2712 - SX19V007-Z2A - 3	12-1/2~ 12-2/2
13	PRECAUTION FOR USE	3284PS 2713 - SX19V007-Z2A - 3	13-1/1

Accepted by : _____ Proposed by : N. Aoyan

RECORD OF REVISION

Date	Sheet No.	Summary
Apr.17,2000	3284PS 2705-SX19V007-Z2A-2 Page 5-1/3	5.1 ELECTRICAL CHARACTERISTICS OF LCD (1)Changed Contrast Adjustment Voltage TYP TYP Ta= 5°C : T.B.D → 1.65 Ta=40°C : T.B.D → 1.95 (2)Revised Frame Frequency in (Note 6) fFLM=70Hz → 100Hz
	3283PS 2709-SX19V007-Z2A-2 Page 9-2/2	9.2 BACK SIDE Changed Rev. and Lot No. 0031TN00001 REV.A → 0042TN00001 REV.B
	3284PS 2710-SX19V007-Z2A-2 Page 10-1/4	10.2 DEFINITION OF ZONE Revised definition A zone : The effective display area ------- ↓ The dots area ------ B zone : Area between the window of bezel line and the effective display area ------ ↓ Area between the effective display area and the dots area -----
	3284PS 2712-SX19V007-Z2A-2 Page 12-2/2	12.2 REVISION Added REV No. B
Aug. 4,2000	3284PS 2705-SX19V007-Z2A-3 Page 5-2/3	5.2.4 OPTICAL CHARACTERISTICS Changed Transparency Specification 80% min → 79% min
	3284PS 2706-SX19V007-Z2A-3 Page 6-1/3	6.1 OPTICAL CHARACTERISTICS Added MIN Contrast ratio (20) at fFLM=70Hz
	3284PS 2709-SX19V007-Z2A-3 Page 9-1/2	9.1 DIMENSIONAL OUTLINE (1) Fixed touch panel size and position Size A → 173.2, Size B → 11.65 (2) Changed table of "Size A & B depend on type of T/P" (3) Changed size of effective area of touch panel 154.2×116.2 → Size A(154.2 or 153.2) ×116.2
	3284PS 2710-SX19V007-Z2A-3 Page 10-4/4	(3)TOUCH PANEL APPEARANCE (1) Changed Criteria of "Glass chipping" a≦5, b≦3, C≦1.1 → a≦5, b≦2, C≦1.1 (2) Added items "Waviness of Top Sheet Surface" "Newton Ring"
	3284PS 2712-SX19V007-Z2A-3 Page 12-2/2	12.2 REVISION Added Rev.C and D

3. MECHANICAL DATA

(1) Part Name	SX19V007-Z2A
(2) Module Size	197.0(W) mm × 145.0(H) mm × 9.8 max (D) mm
(3) Display Size	151.657(W) mm × 113.737(H) mm Diagonal size 19cm (7.5")
(4) Dot Pitch	0.079(W) mm × 0.237(H) mm
(5) Number of Dots	640 × 3 (R,G,B)(W) × 480 (H) dots
(6) Duty	1/497 (Recommendation)
(7) LCD	Negative type
(8) Viewing Direction	6 O'clock
(9) Backlight	Cold Cathode Fluorescent Lamp (CFL) × 1
(10) Weight	350 g typ
(11) Power Supply Voltage	3.3V only
(12) Touch panel	Resistance type

4. ABSOLUTE MAXIMUM RATINGS

4. 1 ELECTRICAL ABSOLUTE MAXIMUM RATINGS (LCM)

VSS=0V:Standard

ITEM	SYMBOL	MIN	MAX	UNIT	COMMENT
Power Supply for Logic	VDD-VSS	0	7.0	V	
Contrast Adjustment Voltage	VCON-VSS	0	VDD	V	
Input Voltage	Vi	-0.3	VDD+0.3	V	Note 1
Input Current	Ii	0	1	A	
Static Electricity	-	-	-	-	Note 2

Note 1 $\overline{\text{DISP•OFF}}$, FLM, CL1, CL2, D0~D7

Note 2 Make certain you are grounded when handling LCM

4. 2 ELECTRICAL ABSOLUTE MAXIMUM RATINGS (TOUCH PANEL)

ITEM	SPECIFICATION	NOTE
Voltage	(7VDC) (max)	
Current	(25mA) (max)	

4. 3 ENVIRONMENTAL ABSOLUTE MAXIMUM RATINGS

ITEM	OPERATING		STORAGE		COMMENT
	MIN	MAX	MIN	MAX	
Ambient Temperature	5°C	50°C	-20°C	60°C	Note 2, 3
Humidity	Note 1		Note 1		Without condensation
Vibration	-	2.45 m/s^2	-	11.76 m/s^2 Note 5	Note 4
Shock	-	29.4 m/s^2	-	490 m/s^2 Note 5	XYZ directions 11ms
Corrosive Gas	Not Acceptable		Not Acceptable		

Note 1 Ta≤40°C : 85%RH max.
Ta>40°C : Absolute humidity must be lower than the humidity of 85%RH at 40°C.

Note 2 Ta at -20°C ---------- <48h, at 60°C ---------- <168h

Note 3 Background color changes slightly depending on ambient temperature.
This phenomenon is reversible.

Note 4 5Hz~100Hz (Except resonance frequency)

Note 5 This module should be operated normally after finish the test.

Note 6 When LCM is operated at 5°C, the life time of CFL will be reduced.
Need to make sure of value of IL and characteristics of inverter.
Also the response time at 5°C will be slower.

5. ELECTRICAL CHARACTERISTICS

5. 1 ELECTRICAL CHARACTERISTICS OF LCD

VSS=0V

ITEM	SYMBOL	CONDITION		MIN	TYP	MAX	UNIT
Power Supply Voltage	VDD	VDD-VSS=3.3V		3.15	3.30	3.45	V
Contrast Adjustment Voltage (Note 1)	VCON	-		0.8	-	2.8	V
Input Voltage for Logic Circuits (Note 2)	Vi	"H" level		0.8VDD	-	VDD	V
		"L" level		0	-	0.2VDD	
Power Supply Current (Note 3)(Note 4)	IDD	VDD-VSS=3.3V fFLM=70Hz	Q	-	40	-	mA
			CF	-	65	100	
		VDD-VSS=3.3V fFLM=100Hz	Q	-	50	-	mA
			CF	-	80	120	
Input Leak Current	Icon(Note5)	Vcon=0.8~2.8V		-	-	(20)	μA
	Iin (Note2)	Vin=VDDorVSS		-	-	±1.0	
Contrast Adjustment Voltage (Note 6)	Vcon	Ta= 5°C, ϕ=0°		0.8	1.65	-	V
		Ta=25°C, ϕ=0°		-	1.8	-	
		Ta=40°C, ϕ=0°		-	1.95	2.8	
Frame Frequency (Note 7)	fFLM	-		70	100	120	Hz

(Note 1) In proportion as the VCON voltage decrease the brightness will increase.
(Note 2) $\overline{DISP}$•OFF, FLM, CL1, CL2, D0~D7
(Note 3) Duty=1/497, Ta=25°C, Display pattern : "Q" test pattern(Q), Checker pattern(CF).
(Note 4) Rush Current of Power ON : 2A(PK) × 100μs
(Note 5) VCON
(Note 6) The Contrast Adjustment Voltage is specified as 1.8±0.3V under the condition, when an optimum contrast is obtained by naked eyes as the "Q" test pattern.
fFLM=100Hz, Duty=1/497
(Note 7) Need to make sure of flickering and rippling of display when setting the Frame Frequency in your set.
(Note 8) Absolute maximum ratings voltage of CFL cable for this module is as follows.
VCFL side : 2kV
VSS side : 300V
This inverter design shall not exceed the rated voltage.

5. 2 ELECTRICAL CHARACTERISTICS OF TOUCH PANEL

5.2.1 OPERATING CONDITION

ITEM	SPECIFICATION
Operating Voltage	5VDC
Operating Current	10~25mA

5.2.2 ELECTRICAL CHARACTERISTICS

ITEM		SPECIFICATION	NOTE
Resistance between terminal	X1-X2	350~1050Ω	
	Y1-Y2	200~600Ω	
Insulance Resistance	X-Y	10MΩ min	Operating Voltage:25VDC
Linearity	X	1.5% max	See Note 1
	Y	1.5% max	
Chattering		10ms max	

5.2.3 MECHANICAL CHARACTERISTICS

ITEM	SPECIFICATION	NOTE
Pen input pressure	0.5N max	
Surface hardness	2H min	JIS K 5400

5.2.4 OPTICAL CHARACTERISTICS

ITEM	SPECIFICATION	NOTE
Transparency	79% min	

Note 1 : Test Method and Conditions

The difference ("e") between the theoretical output voltage and the actual output voltage when pressure is applied to any point within the valid area must be as indicated below.

e ≤ applied voltage × 0.03 (=±0.015)

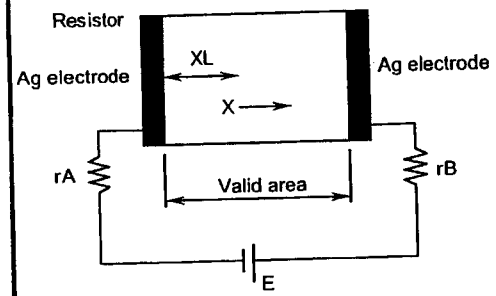

rA, rB = Resistance of Pattern

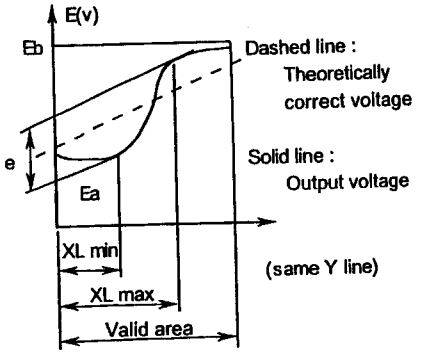

5. 3 ELECTRICAL CHARACTERISTICS OF BACKLIGHT

ITEM	SYMBOL	MIN	TYP	MAX	UNIT	NOTE
Lamp Voltage	VL	-	(460)	-	Vrms	Ta=25°C
Frequency	fL	(50)	(60)	(70)	kHz	
Lamp Current (1Lamp) (Note6)	IL	3.0 (Note 2)	(4.0)	5.0 (Note 2)	mA	Ta=25°C
Starting discharge Voltage	VS (Note 2)	1400	-	-	Vrms	Ta=5°C

(Note 1) Please design your lamp driving circuit (inverter) according to the above specifications, and inform Hitachi of it.

(Note 2) Starting discharge voltage is increased when LCM is operating at lower temperature. Please check the characteristics of your inverter before applying to your set.

(Note 3) Average life time of CFL will be decreased when LCM is operating at lower temperature.

(Note 4) Under lower driving frequency of an inverter, a certain backlight system (CFL & CFL reflection sheet) may generate a sound noise. Before designing the inverter, please consider the driving frequency and the noise.

(Note 5) When ICFL is used over 4.5mA, it may cause uneven contrast near CFL location, due to heat dispersion from CFL.

(Note 6) Under lower temperature, please check CFL characteristics on your inverter.

(Note 7)

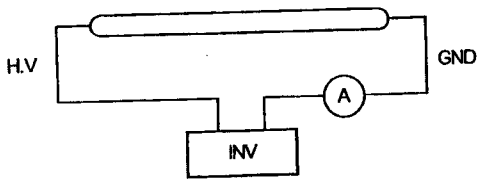

(Note 8) We recommend to equip protection circuit (To stop output) which works under abnormal operation to the inverter for CFL.

6. OPTICAL CHARACTERISTICS

6.1 OPTICAL CHARACTERISTICS OF LCD

Ta=25°C (Backlight On)

ITEM		SYMBOL	CONDITION	MIN	TYP	MAX	UNIT	NOTE
Viewing area		φ2-φ1	θ=0°, K≥2.0	-	(40)	-	deg	1),2)
Contrast ratio		K	φ=0°, θ=0° fFLM=100Hz	-	(40)	-	-	3),5),6)
			φ=0°, θ=0° fFLM=70Hz	20	(30)	-	-	
Response time (rise)		tr	φ=0°, θ=0°	-	(300)	-	ms	4)
Response time (fall)		tf	φ=0°, θ=0°	-	(250)	-	ms	4)
Color tone (Primary Color)	Red	x	φ=0°, θ=0°	-	(0.49)	-	-	7)
		y		-	(0.30)	-	-	
	Green	x		-	(0.31)	-	-	
		y		-	(0.51)	-	-	
	Blue	x		-	(0.16)	-	-	
		y		-	(0.14)	-	-	
	White	x		-	(0.28)	-	-	
		y		-	(0.30)	-	-	

(Measurement condition : Hitachi standard, Duty=1/497)

Note 1)-7) : See next page.

Note 1. Definition of θ and ϕ

(Normal)

View ing direction

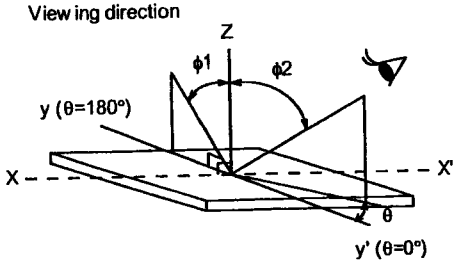

Note 3. Definition of contrast "K"

$$K = \frac{\text{Brightness on selected area (B1)}}{\text{Brightness on non-selected area (B2)}}$$

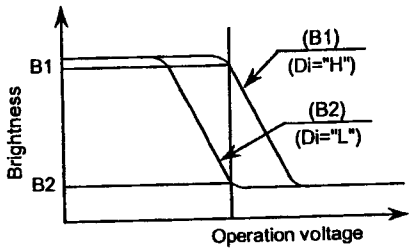

Note 2. Definition of view ing angle ϕ1 and ϕ2

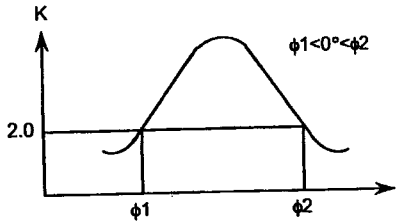

Contrast ratio K vs view ing angle ϕ

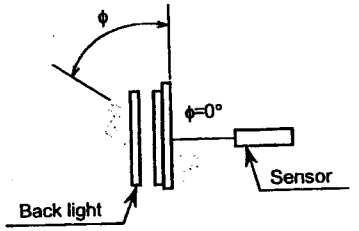

Sensor : BM-7 or correspondence equipment

Note 4. Definition of optical response time

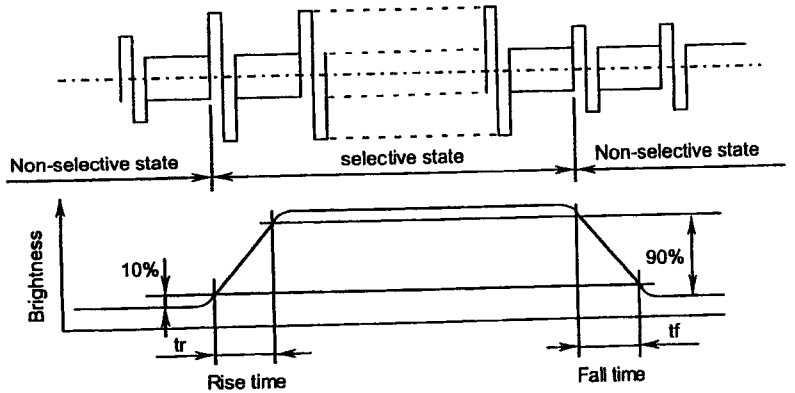

Note 5. Hitachi w ill not do 100% inspection for minimum value. Minimum value is for reference.

Note 6. Hitachi w ill do sampling inspection for minimum value.

Note. 7 The LCD driving voltage should be adjusted at the voltage w here the peak contrast is obtained.

6.2 OPTICAL CHARACTERISTICS OF BACKLIGHT

ITEM	MIN	TYP	MAX	UNIT	NOTE
Brightness	-	(70)	-	cd/m^2	IL=4.0mA Note 1),2)
Rise Time	-	5	-	Minute	IL=4.0mA Brightness 80%
Brightness Uniformity	-	-	±30	%	Undermentioned Note 1),4)

Measurement condition : Hitachi standard)

CFL : INITIAL, Ta=25°C

Display data should be all "ON"

The LCD driving voltage should be adjusted at the voltage w here the peak contrast is obtained, w hen set pattern is all "Q".

(Note 1) Measurement after 10 minutes from CFL operating.
Average value of 9 points (Note 3).

(Note 2) Brightness control : 100%

(Note 3) Measurement of the follow ing 9 places on the display.

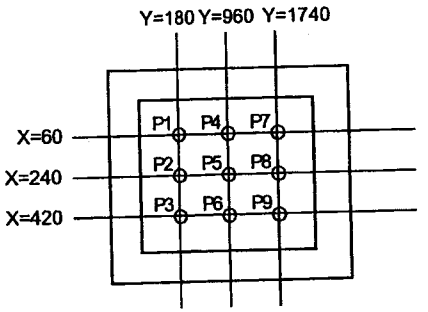

(Note 4) Definition of the brightness tolerance.

$$\left(\frac{\text{Max brightness or Min brightness - Average brightness}}{\text{Average brightness}}\right) \times 100$$

(Note 5) fFLM=100Hz , Duty=1/497

7. BLOCK DIAGRAM

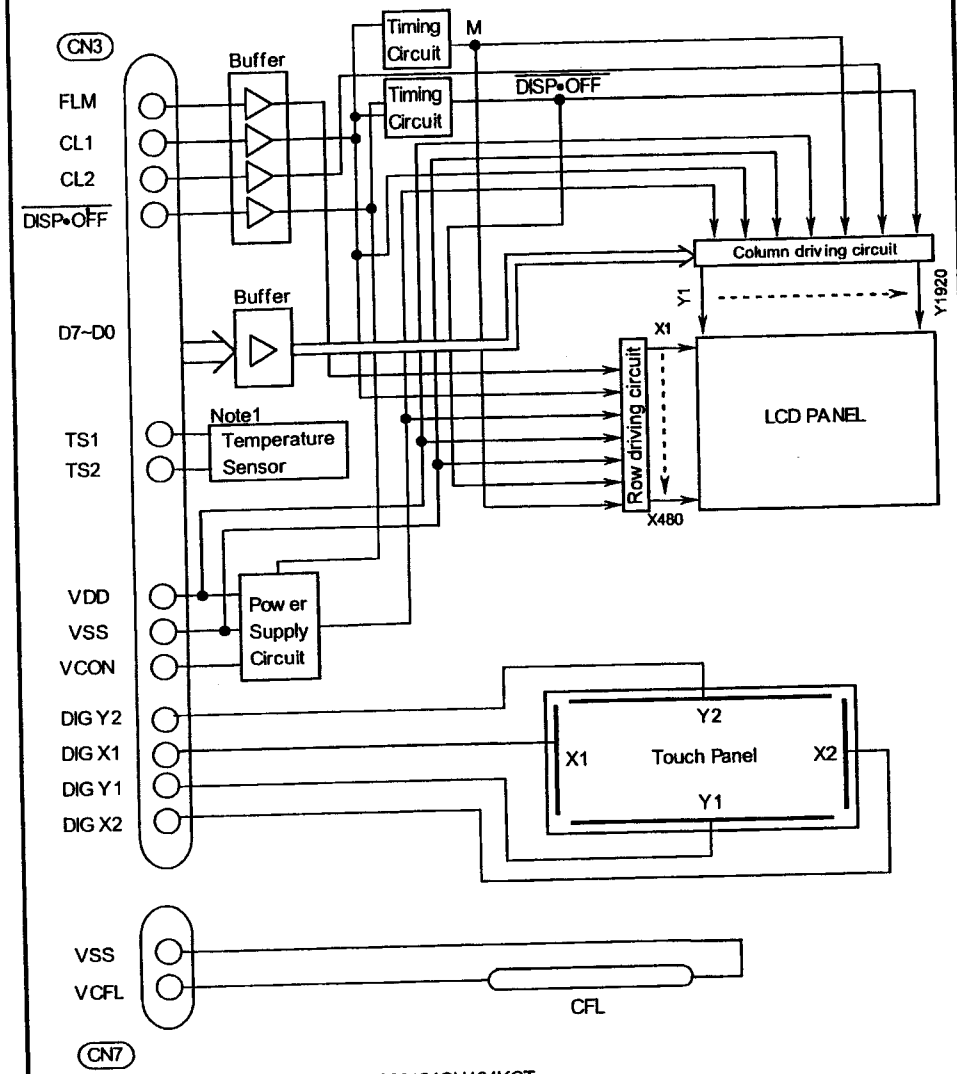

Note1; TDK NTCC20124CH104KCT

Displays, Hitachi, Ltd.	Date	Aug. 4, 2000	Sh. No.	3284PS 2707 - SX19V007-Z2A - 3	Page	7-1/1

8. INTERFACE TIMING CHART

8.1 TIMING CHART

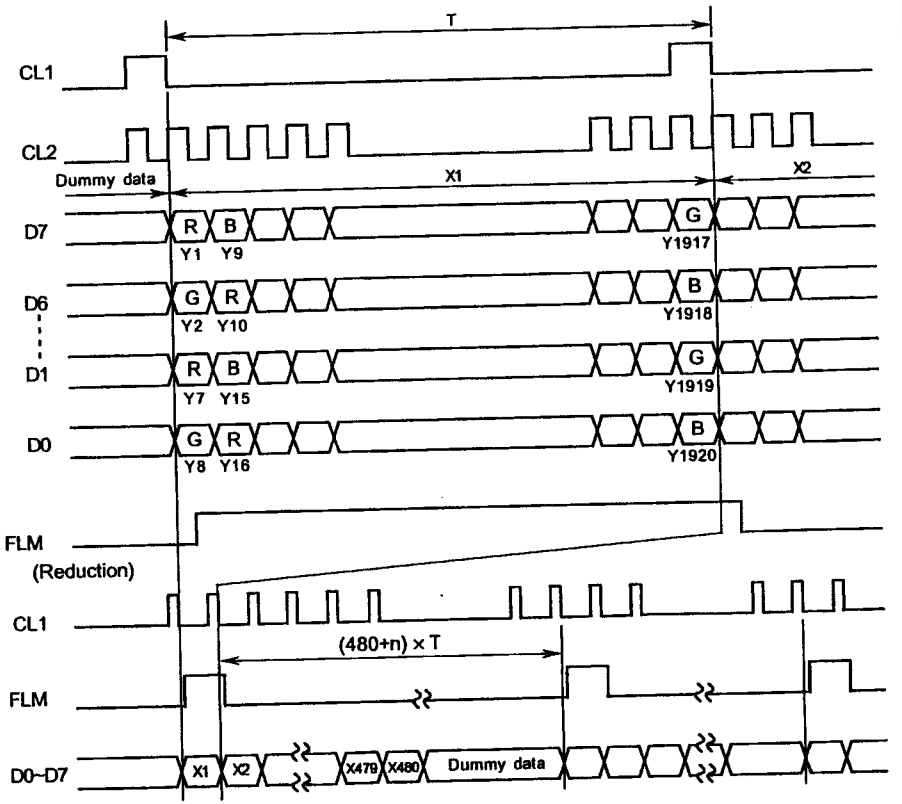

Displays, Hitachi, Ltd.	Date	Aug. 4, 2000	Sh. No.	3284PS 2708 - SX19V007-Z2A - 3	Page	8-1/6

8.2 INTERFACE TIMING SPECIFICATION

VDD=3.3±0.15V, VSS=0V, Vcon=0.8~2.8V, Ta=+5°C~+40°C

ITEM	SYMBOL	MIN	TYP	MAX	UNIT
CL1 pulse width "H"	tWHCL1	200	—	—	ns
Clock cycle time	tCYC	40	—	—	ns
CL2 pulse width	tWCL2	15	—	—	ns
Clock set up time	tSCL1	20	—	—	ns
Clock hold time	tHCL1	50	—	—	ns
Clock rise fall time	tr, tf	—	—	30	ns
Data set up time	tDSU	10	—	—	ns
Data hold time	tDH	10	—	—	ns
"FLM" set up time	tFS	100	—	—	ns
"FLM" hold time	tFH	30	—	—	ns

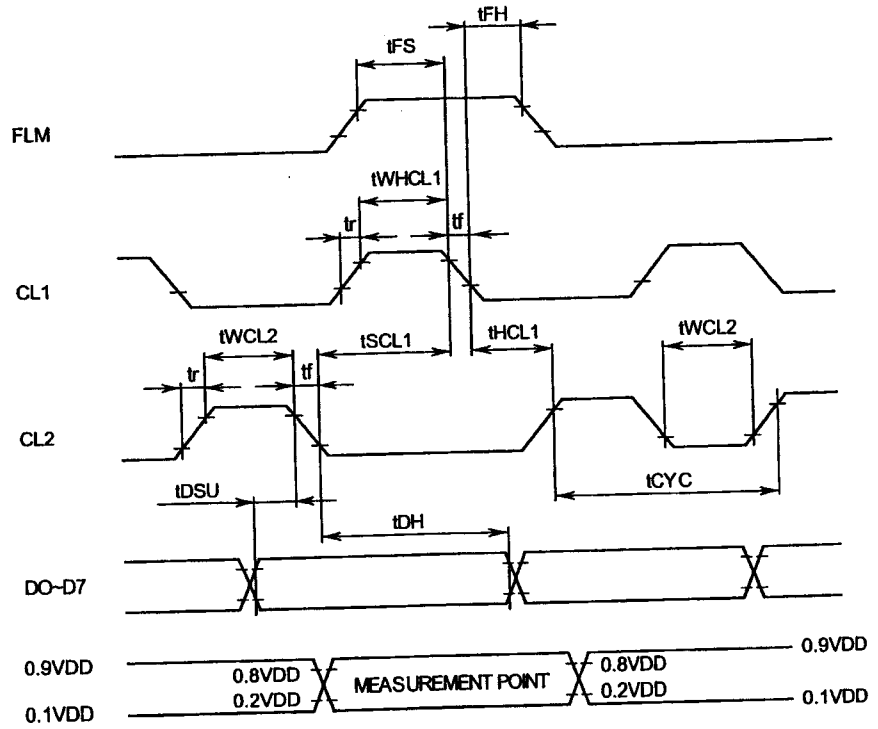

8.3 POWER ON / OFF SEQUENCE

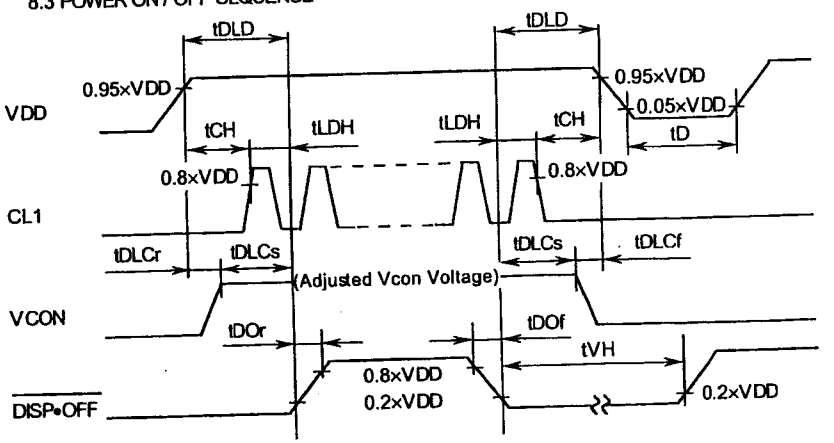

SYMBOL	MIN	MAX	UNIT	COMMENT
tDLD	70	-	ms	(Note 1, 5)
tCH	0	200	ms	(Note 1)
tLDH	20	-	ms	
tDOr	-	100	ns	(Note 2)
tDOf	-	100	ns	
tDLCr	0	-	ms	
tDLCf	0	-	ms	
tDLCs	0	-	ms	(Note 2,3)
tVH	200	-	ms	(Note 4)
tD	400	-	ms	(Note 1)

(Note 1) Please keep the specified sequence because wrong sequence may cause permanent damage to the LCD panel.

(Note 2) Hitachi recommends you to use $\overline{\text{DISP•OFF}}$ function.
Display quality may deteriorate if you don't use $\overline{\text{DISP•OFF}}$ function.

(Note 3) $0.8 \leq \text{Vcon} \leq 2.8\text{V}$
Vcon voltage should be set up to adjusted voltage before $\overline{\text{DISP•OFF}}$ signal arises. Otherwise, when $\overline{\text{DISP•OFF}}$ signal arises, adjusted contrast image may not be generated.

(Note 4) Please keep the specified sequence of $\overline{\text{DISP•OFF}}$ signal because if the tVH is short enough, LCD panel may not be restarted.

(Note 5) In case of tDLD is less than 100ms, some lines may appear on screen. However, there is no problem on reliability.

8.4 POWER SUPPLY FOR LCM

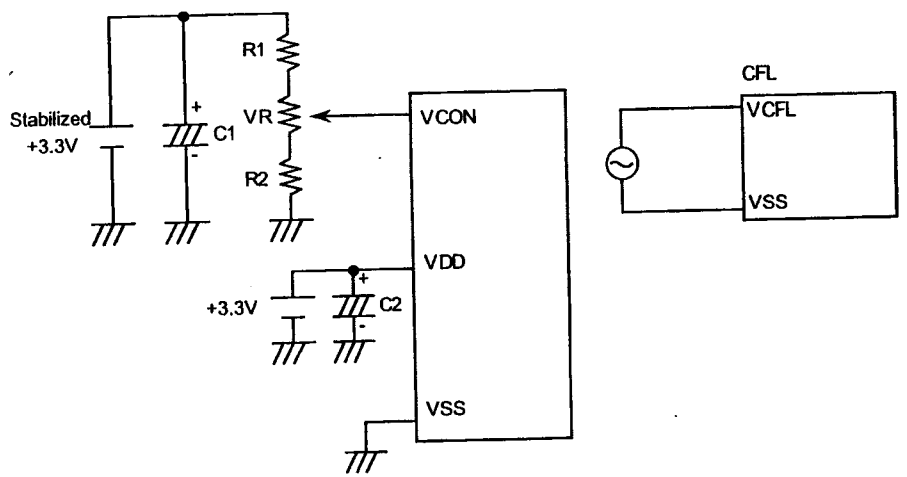

8.5 INPUT DATA ALLOCATION TABLE

Data Signal	D7	D6	D5	D4	D3	D2	D1	D0	D7	D6	D5	D4	-----	D4	D3	D2	D1	D0
X \ Y	1	2	3	4	5	6	7	8	9	10	11	12	-----	1916	1917	1918	1919	1920
1	R	G	B	R	G	B	R	G	B	R	G	B	-----	G	B	R	G	B
2	R	G	B	R	G	B	R	G	B	R	G	B	-----	G	B	R	G	B
3	R	G	B	R	G	B	R	G	B	R	G	B	-----	G	B	R	G	B
4	R	G	B	R	G	B	R	G	B	R	G	B	-----	G	B	R	G	B
5	R	G	B	R	G	B	R	G	B	R	G	B	-----	G	B	R	G	B
⋮	⋮	⋮	⋮	⋮	⋮	⋮	⋮	⋮	⋮	⋮	⋮	⋮		⋮	⋮	⋮	⋮	⋮
478	R	G	B	R	G	B	R	G	B	R	G	B	-----	G	B	R	G	B
479	R	G	B	R	G	B	R	G	B	R	G	B	-----	G	B	R	G	B
480	R	G	B	R	G	B	R	G	B	R	G	B	-----	G	B	R	G	B

R : RED
G : GREEN
B : BLUE

8.6 INTERNAL PIN CONNECTION

CN3 MOLEX 52435-2891

PIN No.	SIGNAL	LEVEL	FUNCTION
1	TS2	-	Temperature Sensor PIN2
2	TS1	-	Temperature Sensor PIN1
3	VSS	-	GND
4	Vcon	-	Contrast Adjust
5	VSS	-	GND
6	VDD	-	Pow er Supply for Logic
7	VDD	-	Pow er Supply for Logic
8	$\overline{\text{DISP•OFF}}$	H / L	H : ON / L : OFF
9	D7	H / L	Display Data
10	D6		
11	D5		
12	D4		
13	D3		
14	D2		
15	D1		
16	D0		
17	VSS	-	GND
18	CL2	H / L	Data Shift
19	VSS	-	GND
20	CL1	H / L	Data Latch
21	VSS	-	GND
22	FLM	H	First Line Marker
23	VSS	-	GND
24	VSS	-	GND
25	DIGY2	-	Touch panel Y2
26	DIGX1	-	Touch panel X1
27	DIGY1	-	Touch panel Y1
28	DIGX2	-	Touch panel X2

CN7 JST : BHSR-02VS-1 (Suitable Connector : (1) SM02B-BHSS-1-TB
or
(2) Housing : BHSMR-02VS-1
Contact pin : SBHSM-002T-P0.5)

PIN No.	SIGNAL	LEVEL	FUNCTION
1	VCFL	A C	Pow er Supply for CFL
2	VSS	-	GND for CFL

9.2 BACK SIDE

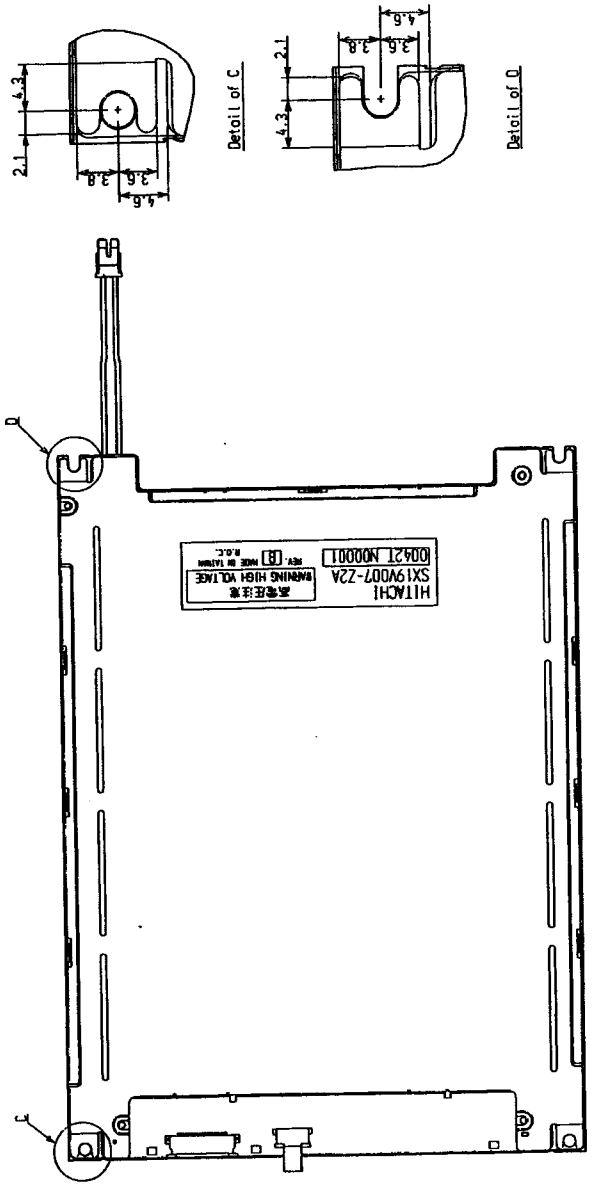

Unit : mm
Scale : NTS

9. DIMENSIONAL OUTLINE

9.1 DIMENSIONAL OUTLINE

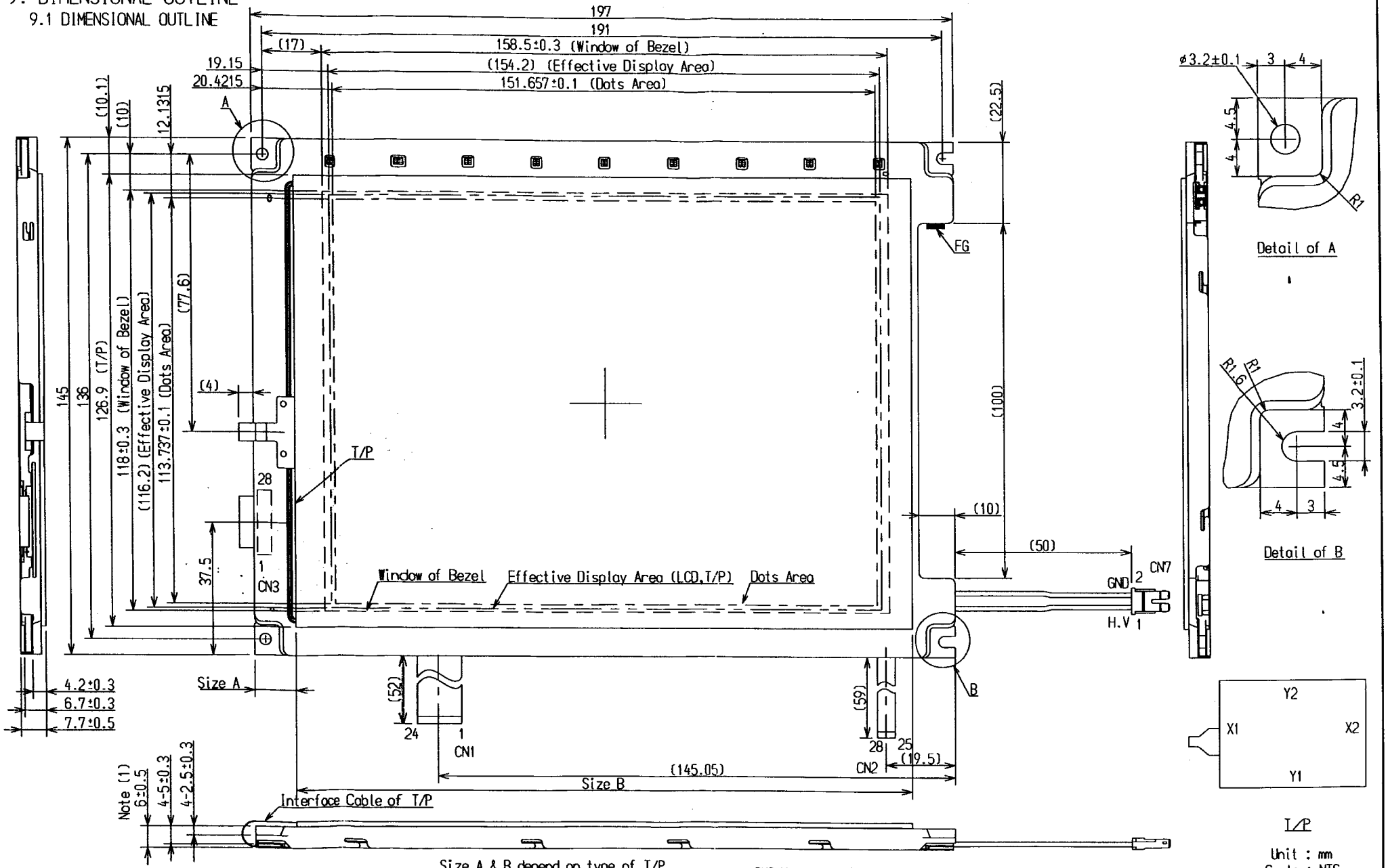

Note(1) Measurement Should be under a pressure of 9.8×10^4Pa(1.0kgf/cm2) at the measurement point.

Size A & B depend on type of T/P.

T/P	Size A	Size B
Type A	(11.65)	173.2
Type B	(14.15)	170.0

CN3 Molex : 52435-2891
CN7 JST : BHSR-02VS-1

Unit : mm
Scale : NTS
Measurment tolerance : ±0.5

Displays, Hitachi,Ltd.	Date	July 26,'99	Sh. No.	3283PS 2709-SX19V001-Z2A-2	Page	9-1/2

9.2 BACK SIDE

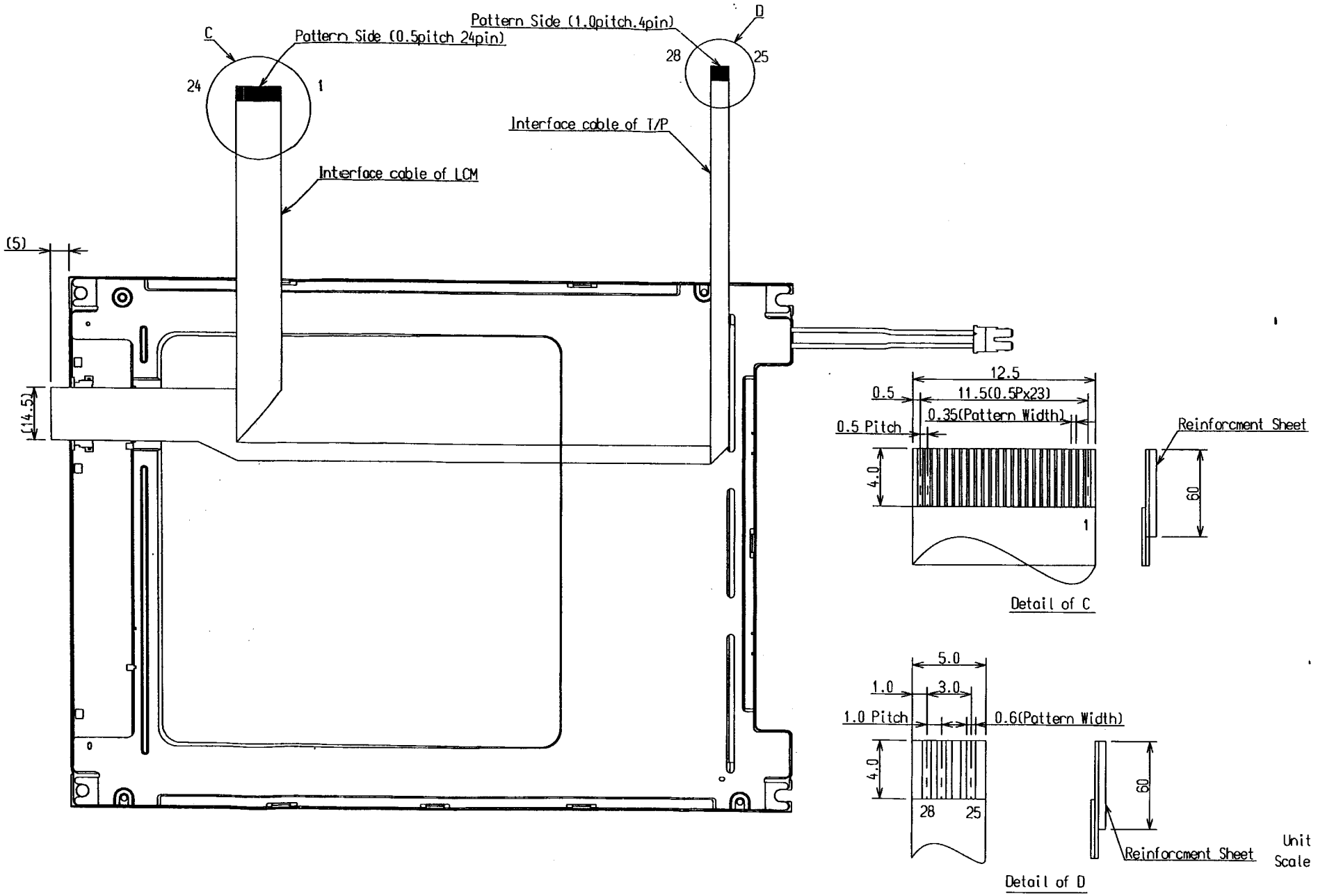

Displays, Hitachi,Ltd.	Date	July 26,'99	Sh. No.	3283PS 2709-SX19V001-Z2A-2	Page	9-2/2

10. APPEARANCE STANDARD

10.1 APPEARANCE INSPECTION CONDITION

Visual inspection should be done under the following condition.

(1) The inspection should be done in a dark room.
(2) The CFL should be lighted with the prescribed inverter.
(3) The distance between eyes of an inspector and the LCD Module is 25cm.
(4) The viewing zone is shown the figure.
View ing angle ≤ 25°

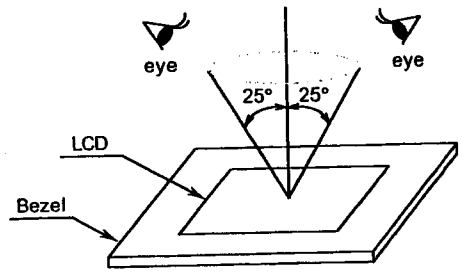

10.2 DEFINITION OF ZONE

A zone : The dots area specified at page 9-1/2 of this document.

B zone : Area between the effective display area line and the dots area (A zone) line specified at page 9-1/2 of this document.

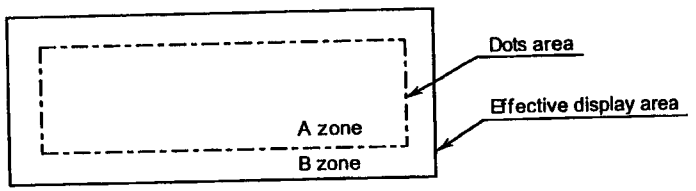

10.3 APPEARANCE SPECIFICATION

(1) LCD APPEARANCE

*) If the problem related to this section occurs about this item, the responsible persons of both party (Customer and HITACHI) will discuss the matter in detail.

No.	ITEM	CRITERIA			APPLIED ZONE
L	Scratches	Distinguished one is not acceptable (To be judged by HITACHI STANDARD)			A
	Dent	Same as above			A
	Wrinkles in Polarizer	Same as above			A
	Bubbles	Average diameter D (mm)	Maximum acceptable number		A
		D ≤ 0.2	ignored		
		0.2 < D ≤ 0.3	12		
		0.3 < D ≤ 0.5	3		
		0.5 < D	none		
C	Stains, Foreign materials Dark spot	Filamentous (Line shape)			A,B
		Length L (mm)	Width W (mm)	Maximum acceptable number	
		L ≤ 2.0	W ≤ 0.03	ignored	
		L ≤ 3.0	0.03 < W ≤ 0.05	6	
		L ≤ 2.5	0.05 < W ≤ 0.1	1	
D		Round (Dot shape)			A,B
		Average diameter D (mm)	Maximum acceptable number	Minimum space	
		D < 0.2	ignored	—	
		0.2 ≤ D < 0.3	10	10 mm	
		0.3 ≤ D < 0.4	5	30 mm	
		0.4 ≤ D	none	—	
		The total number	Filamentous + Round = 10		
		Those wiped out easily are acceptable			
	Color tone	To be judged by HITACHI STANDARD			A
	Color uniformity	Same as above			A

No.	ITEM	CRITERIA				APPLIED ZONE
LCD	Contrast irregularity (Spot)	Average diameter D (mm)	Contrast	Maximum acceptable number	Minimum space	A
		D≤0.25	To be judged by HITACHI STANDARD	ignored	—	
		0.25<D≤0.35		10	20mm	
		0.35<D≤0.5		4	20mm	
		0.5<D≤0.7		3	50mm	
		0.7<D		none	—	
	Contrast irregularity (Line) (A pair of scratches)	Width W (mm)	Length L (mm)	Maximum acceptable number	Minimum space	A
		W ≤ 0.25	L ≤ 1.2	2	20mm	
		W ≤ 0.2	L ≤ 1.5	3	20mm	
		W ≤ 0.15	L ≤ 2.0	3	20mm	
		W ≤ 0.1	L ≤ 3.0	4	20mm	
		The whole number		6		
	Rubbing Scratch	To be judged by HITACHI STANDARD				—

(2) CFL BACKLIGHT APPEARANCE

No.	ITEM	CRITERIA			APPLIED ZONE
CFL BACKLIGHT	Dark spots White spots Foreign materials (Spot)	Average diameter D (mm)	Maximum Acceptable number		A
		D ≤ 0.4	Ignored		
		0.4 < D	none		
	Foreign materials (Line)	Width W (mm)	Length L (mm)	Maximum acceptable number	A
		W ≤ 0.2	L ≤ 2.5	1	
			2.5 < L	none	
		0.2 < W	—	none	
	Scratches	Width W (mm)	Length L (mm)	Maximum acceptable number	A
		W ≤ 0.1	—	ignored	
		0.1 < W ≤ 0.2	L ≤ 11.0	1	
			11.0 < L	none	
		0.2 < W	—	none	

(3) TOUCH PANEL APPEARANCE

No.	ITEM	CRITERIA		APPLIED ZONE
TOUCH PANEL	Foreign material (Black or White spots)	Average diameter D (mm)	Criteria	A
		D ≤ 0.25	ignored	
		0.25 < D ≤ 0.35	6	
		0.35 < D	none	
	Foreign material (Line) or Scratches	Width W (mm)	Criteria	A
		W ≤ 0.05	ignored	
		0.05 < W ≤ 0.1	10 ≤ L : none L < 10 : 4	
		0.1 < W	Spot spec	
	Fisheyes on film surface	Average diameter D (mm)	Criteria	A
		D ≤ 0.2	ignored	
		0.2 < D ≤ 0.4	6	
		0.4 < D ≤ 0.6	2	
		0.6 < D	none	
	Uncleanliness	No conspicuous dirt		A
	Glass chipping	a ≤ 5 , b ≤ 2 , c ≤ 1.1 None of the above figures may be exceeded. The number of chipped are as does not need to be considered. (This specification applied to corner of glass also)		
	Glass Crack	No cracks are allowed. No chipping to touch with circuit.		
	Waviness of Top Sheet Surface	Fluorescent lamp must not appear distorted.		A
	Newton Ring	No unusual interference fringe must show when seen through the top surface sheet		A

Note (1) Definition of Average diameter (D)

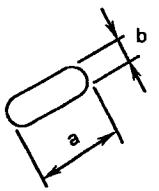

$$D = \frac{a+b}{2}$$

Note (2) Definition of Length (L) and Width (W)

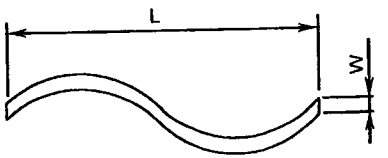

11. PRECAUTION IN DESIGN

11. 1 MOUNTING PRECAUTION

Please mount the LCD Module using mounting holes arranged in 4 corners, and please pay attention to the following.

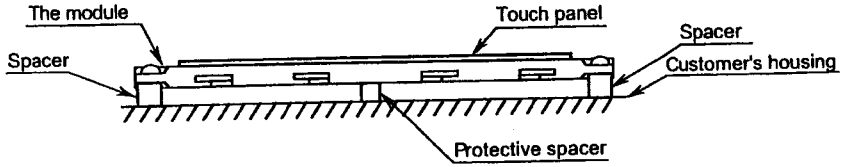

Example of mounting

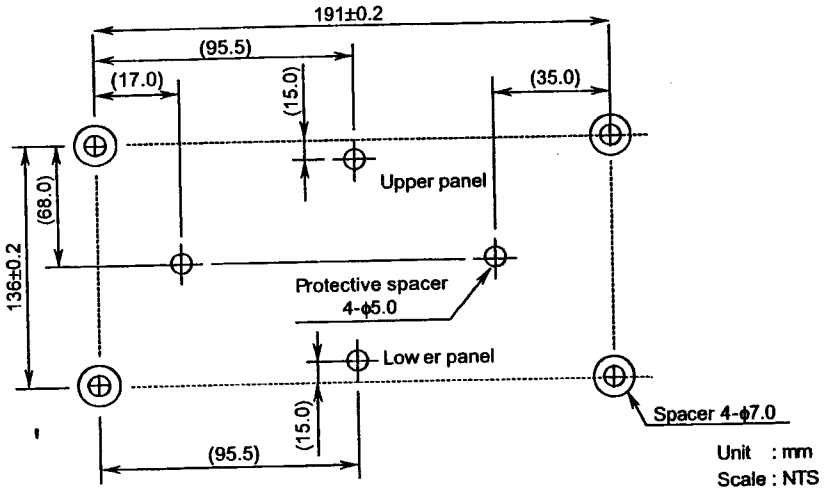

Location of spacers

(1) To prevent the module cover from being pressed, the distance betw een the module and the fitting plate, w hich means the length of the spacers, should be shorter than 1.0mm.

(2) We recommend you to use protective spacers in order to protect the module from any kinds of shocks to your set.

(3) For the module to be used at upright position, the case shall have a structure w here the touch panel screen does not shift w ith its ow n w eight.

(4) When assembling the touch panel and your case, please refer to the figure below.

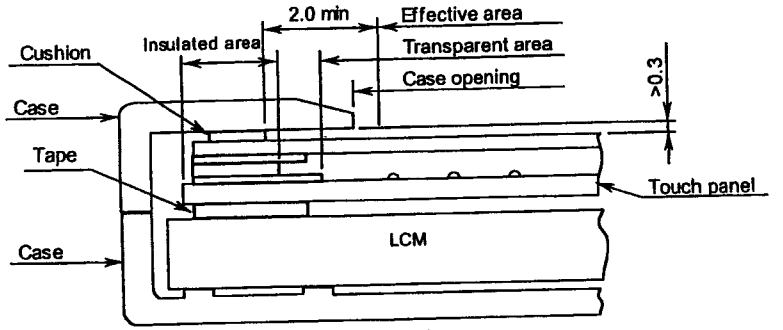

(5) The clearance betw een the touch panel and the case shall be designed so that the case edge never presses the input screen w hen it is deformed by heat or other causes.

(6) The case shall be designed not to touch the tail portion (FPC for touch panel).

(7) The boundary space betw een the effective area and the insulated area is unstable. Touching this area may effect the operation of the touch panel. The case must be designed so that it does not touch the boundary space.

11.2 PRECAUTIONS AGAINST ELECTROSTATIC DISCHARGE

As this module contains C-MOS LSIs, it is not strong against electrostatic discharge. Make certain that the operator's body is connected to the ground through a list band etc. And don't touch I/F pins directly.

11.3 POWER ON SEQUENCE

Input signals should not be applied to LCD module before pow er supply voltage is applied and reaches to specified voltage (3.0±0.15V).

If the above sequence is not kept, C-MOS LSIs of LCD module may be damaged due to latch up phenomenon.

11.4 HANDLING PRECAUTIONS

(1) Since the polarizer on the top, and the aluminum plate on the bottom tend to be easily damaged, they should be handled w ith full care so as not to get them touched, pushed or rubbed by a piece on glass, tw eezers and anything else w hich are harder than a pencil lead 3H.

(2) As the adhesives used for adhering upper/low er polarizers and aluminum plate are made of organic substances w hich w ill be deteriorated by a chemical reaction w ith such chemicals as acetone, tuluene, ethanole and isopropylalcohol. The follow ing solvents are recommended for use : Normal hexane

Please contact us w hen it is necessary for you to use chemicals other than the above.

(3) Lightly wipe to clean the dirty surface with absorbent cotton or other soft material like chamois, soaked in the recommended chemicals without scrubbing it hardly.
Always wipe the surface horizontally or vertically. Never give a wipe in a circle. To prevent the display surface from damage and keep the appearance in good state, it is sufficient, in general, to wipe it with absorbent cotton.

(4) Immediately wipe off saliva or water drop attached on the display area because it may cause deformation or faded color.

(5) Fogy dew deposited on the surface may cause a damage, stain or dirt to the polarizer.
When you need to take out the LCD module from some place at low temperature for test, etc. It is required to be warmed them up to be temperature higher than room temperature before taking them out.

(6) Touching the display area or I/F pins with bare hands or contaminating them are prohibited, because the stain on the display area and poor insulation between terminals are often caused by being touched with bare hands.
(Some cosmetics are detrimental to polarizers.)

(7) In general, the glass is fragile so that it, especially on its periphery, tends to be cracked or chipped in handling. Please do not give the LCD module sharp shocks caused by falling etc.

(8) Maximum pressure to the surface must be less than 1.96×10^4 Pa.
And if the pressure area is less than $1cm^2$, maximum pressure must be less than 1.96N.

(9) Top sheets shall be cleaned gently using a soft cloth such as those used for glasses.
Hard wiping accumulated dust will leave scars on the surface even using a cloth.

11.5 OPERATION PRECAUTION

(1) Using a LCM module beyond its maximum ratings may result in its permanent destruction. LCM module's should usually be used under recommended operating conditions shown in chapter 5. Exceeding any of these conditions may adversely affect its reliability.

(2) Response time will be extremely delayed at lower temperature than the specified operating temperature range and on the other hand LCD's shows dark blue color at higher temperature. However those phenomena do not mean defects of the LCD module. Those phenomena will disappear in the specified operating temperature range.

(3) If the display area is pushed hard during operation, some display patterns will be abnormally displayed.

(4) A slight dew depositing on terminals may cause electrochemical reaction which leads to terminal open circuit. Please operate the LCD module under the relative condition of 40°C 85%RH.

(5) Resistance range : Your controller shall be set up to allow the resistance range of touch panel specified in our CAS.

(6) Pointed position of touch panel may shift owing to a change in resistance of touch panel depending on the operation condition. To compensate this shift, the set shall be given a calibration function.

(7) Input shall be made with a stylus pen (polyacetal, R0.8). Chances are very high that use of a metal piece including a ball point pen or sharp edge will impair accuracy.

(8) The touch panel is an auxiliary input device. The system shall be designed to have other input device.

11.6 STORAGE

In case of storing LCD module for a long period of time (for instance, for years) for the purpose of replacement use, the following precautions necessary.

(1) Store the LCD modules in a dark place ; do not expose them to sunlight or ultraviolet rays.

(2) Keep the temperature between 10°C and 35°C at normal humidity.

(3) Store the LCD modules in the container which is used for shipping from us.

(4) No articles shall be left on the surface over an extended period of time.

11.7 SAFETY

The LCD modules include Cold Cathode Fluorescent Lamp (CFL). CFL contains a small amount of mercury. Please follow local ordinances or regulations for disposal.

Wear finger cots or gloves whenever handling or assembling a touch panel because its glass edges are sharp.

12. DESIGNATION OF LOT MARK

12.1 LOT MARK

Lot mark is consisted of 4 digits for production lot and 6 or 7 digits for production control.

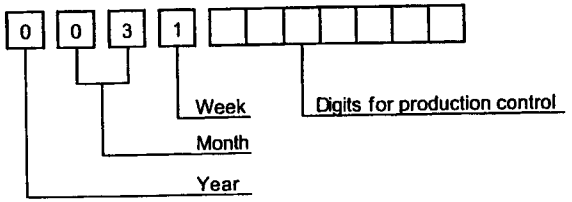

Year	Figure in lot mark
2000	0
2001	1
2002	2
2003	3

Month	Figure in lot mark	Month	Figure in lot mark
Jan.	01	July	07
Feb.	02	Aug.	08
Mar.	03	Sep.	09
Apr.	04	Oct.	10
May	05	Nov.	11
June	06	Dec.	12

Week (day in Calender)	Figure in lot mark
1~7	1
8~14	2
15~21	3
22~28	4
29~31	5

12.2 REVISION

REV No.	ITEM	LOT No.	PRODUCTION CONTROL No.
A	-	0031TN	00001~
B	Vcon tuned under low and high temperature	0042TN	00001~
C	Segment LCD Driver : BD66134U	-	00001~
D	Segment LCD Driver : WFP-7102	-	00001~

12.3 LOCATION OF LOT MARK

Either Label A or Label B is being attached on the back side of LCM.

Label A

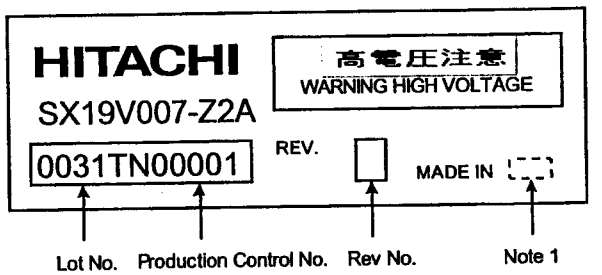

Label B

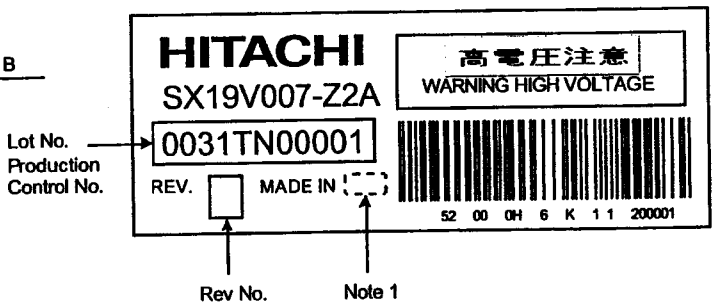

Note 1 : JAPAN or TAIWAN

13. PRECAUTION FOR USE

(1) A limit sample should be provided by the both parities on an occasion when the both parties agree to its necessity.
Judgment by a limit sample shall take effect after the limit sample has been established and confirmed by the both parties.

(2) On the following occasions, the handling of the problem should be decided through discussion and agreement between responsible persons of the both parties.

(1) When a question is arisen in the specifications.
(2) When a new problem is arisen which is not specified in the specifications.
(3) When an inspection specification change or operating condition change by customer is reported to HITACHI, and some problem is arisen in the specification due to the change.
(4) When a new problem is arisen at the customer's operating set for sample evaluation

(3) Regarding the treatment for maintenance and repairing, both parties will discuss it in six month later after latest delivery of this product.

The precaution that should be observed when handling LCM have been explained above.
If any points are unclear or if you have any requests, please contact Hitachi.