NEC

液晶之友 电话: 020-33819057
Http://www.lcdfriends.com

TFT COLOR LCD MODULE

Type: NL10276BC12-01
16 cm (6.3Type), XGA, RF

LVDS interface (1 port)
High Luminance (Typ 200 cd/m²)
wide viewing angle

SPECIFICATIONS

(First Edition)

PRELIMINARY

This document is preliminary. All information in this document are subject to change without prior notice

NEC Corporation **NEC Electron Devices** **Display Device Operations Unit** **Color LCD Division** **Application Engineering Department**		
Approved		**June 5, 2000**
Checked		**June 5, 2000**
Prepared		**June 5, 2000**

GLEICHMANN ELECTRONICS
VERTRIEB ELEKTRONISCHER BAUTEILE + SYSTEME
BAU UND ENTWICKLUNG ELEKTRONISCHER GERÄTE

Displays & Systems
Industriestr. 16
D-76298 Stutensee
Tel. +49 7249 910 152
Fax: +49 7249 4232
E-Mail: display@msc-ge.com
Internet: http://www.msc-ge.com

www.DataSheet4U.com

No part of this document may be copied or reproduced in any form or by any means without the prior written consent of NEC Corporation. NEC Corporation assumes no responsibility for any errors, which may appear in this document.

NEC Corporation does not assume any liability for infringement of patents, copyrights or other intellectual property rights of third parties by or arising from use of a device. No license, express, implied or otherwise, is granted under any patents, copyrights or other intellectual property rights of NEC Corporation or others.

The devices listed in this document are not suitable for use of aerospace equipment, submarine cables, nuclear reactor control systems and life support systems.

If customers intend to use NEC devices for above applications or they intend to use "Standard" quality grade NEC devices for applications not intended by NEC, please contact our sales people in advance.

Application examples recommended by NEC Corporation.

Standard: Computers, office equipment, communications equipment, test and measurement equipment, audio and visual equipment, home electronic appliances, machine tools, personal electronic equipment and industrial robots.

Special: Transportation equipment (automobiles, trains, ships, etc.), traffic control systems, anti-disaster systems, anti-crime systems, safety equipment and medical equipment (not specifically designed for life support).

Specific: Aircraft, aerospace equipment, submersible repeaters, nuclear reactor control systems, life support systems or medical equipment for life support, etc.

CONTENTS

1. DESCRIPTION ---- P. 4
2. FEATURES ---- P. 4
3. APPLICATIONS ---- P. 4
4. STRUCTURE AND FUNCTIONS ---- P. 4
5. OUTLINE OF CHARACTERISTICS (at room temperature) ---- P. 5
6. BLOCK DIAGRAM ---- P. 6
7. GENERAL SPECIFICATIONS ---- P. 7
8. ABSOLUTE MAXIMUM RATINGS ---- P. 7
9. ELECTRICAL CHARACTERISTICS ---- P. 7
10. POWER SUPPLY SEQUENCE ---- P. 9
11. INTERFACE PIN CONNECTIONS ---- P. 10
12. METHOD OF CONNECTION FOR LVDS chips ---- P. 11
13. DISPLAY COLORS VS INTPU DATA SIGNALS ---- P. 12
14. INPUT SIGNAL TIMINGS ---- P. 13
15. FOR LVDS RECEIVER ---- P. 18
16. OPTICAL CHARACTERRISTICS ---- P. 19
17. RELIABILTY TEST ---- P. 21
18. GENERAL CAUTIONS ---- P. 22
19. OUTLINE DRAWINGS ---- P. 24
19.1 FRONT VIEW ---- P. 24

1. DESCRIPTION

NL10276BC12-01 is a TFT (thin film transistor) active matrix color liquid crystal display(LCD) comprising amorphous silicon TFT attached to each signal electrode, a driving circuit and a backlight. NL10276BC12-01 has a built-in backlight.
The 16cm(6.3 Type) diagonal display area contains 1024×768 pixels and can display 262,144 colors simultaneously.

2. FEATURES

- High luminance (200 cd/m^2 at IL= 5mArms) *(design target)
- Low reflection
- LVDS interface (adapted THC63LVDM83A or THC63LVDM64A,
- THine Electronics, Inc. as a receiver)
- Supply voltage: 3.3V(only)
- Incorporated edge type backlight (Two lamps, Inverter-less)
  Recommended inverter:65PWB31

3. APPLICATIONS

- Display terminals for control system
- Monitors

4. STRUCTURE AND FUNCTIONS

A color TFT (thin film transistor) LCD module is comprised of a TFT liquid crystal panel structure, LSIs for driving the TFT array, and a backlight assembly. Sandwiching liquid crystal material in the narrow gap between a TFT array glass substrate and a front glass substrate creates the TFT panel structure. After the driver LSIs are connected to the panel, the backlight assembly is attached to the backside of the panel.
RGB (red, green, blue) data signals from a source system is modulated into a form suitable for active matrix addressing by the onboard signal processor and sent to the driver LSIs which in turn addresses the individual TFT cells.
Acting as an Electro-optical switch, each TFT cell regulates light transmission from the backlight assembly when activated by the data source. By regulating the amount of light passing through the array of red, green, and blue dots, color images are created with clarity.

5. OUTLINE OF CHARACTERISTICS (at room temperature)

Display area	129.024 (H)×96.768 (V)mm
Drive system	a-Si TFT active matrix
Display colors	16,194,277 colors ((6bit+FRC)×RGB)
Number of pixels	1024×768
Pixel arrangement	RGB vertical stripe
Pixel pitch	0.126 (H)×0.126 (V)mm
Module size	178.8 (H)×126.8 (V)×12.0 typ. (D)mm
Weight	(TBD) g (typ.)
Contrast ratio	200:1 (typ.)

Viewing angle (more than the contrast ratio of 10:1)
- Horizontal: 50 ° (typ. , left side, right side)
- Vertical: 30 ° (typ. , up side), 45 ° (typ., down side)

Designed viewing direction
- Wider viewing angle without image reversal: up side (12 o'clock)
- Wider viewing angle with contrast ratio: down side (6 o'clock)
- Optimum grayscale (γ =2.2): 5 ° (typ., down side)

Pencil hardness	2H (min. JIS K5400)
Color gamut	60 % (typ. At center, To NTSC) *(design target)
Response time	(TBD) ms (typ.), "white" to "black"
Luminance	200 cd/m^2 (typ. at IL= 5.0mArms) *(design target)
Signal system	LVDS interface (Receiver: THC63LVDM83A, THine Electronics, Inc.) RGB 8-bit** signals, Synchronous signals (Hsync, Vsync), and Dot clock (CLK) encoded with THC63LVDF83A (THine Electronics, Inc.) are preferable.
Supply voltage	3.3 V for Logic and LCD driving
Backlight	Edge light type: Tow cold cathode fluorescent lamps, Inverter-less
Power consumption	(TBD) W (typ. at 200 cd/m^2)

6. BLOCK DIAGRAM

TBD

7. GENERAL SPECIFICATIONS

Items	Specifications	Unit
Module size	178.8±0.5 (H) × 126.8±0.5 (V) × 12.0±0.5(D)	mm
Display area	129.024 (H) × 96.768 (V)	mm
Number of pixels	1024 (H) × 768 (V)	pixel
Dot pitch	0.042 (H) × 0.126 (V)	mm
Pixel pitch	0.126 (H) × 0.126 (V)	mm
Pixel arrangement	RGB (Red, Green, Blue) vertical stripe	—
Display colors	16,194,277 (RGB 8-bit each*)	color
Weight	(TBD)(typ.) , 300 (max.)	g

*:6bit + FRC

8. ABSOLUTE MAXIMUM RATINGS

Parameters	Symbols	Ratings	Unit	Remarks
Supply voltage	VCC	-0.3 to +4.0	V	Ta = 25℃
Logic input voltage	VI	-0.3 to VCC+0.3	V	
Lamp voltage	VL	1,500	V	
Storage temperature	Tst	-20 to +60	℃	—
Operating temperature	Top	0 to +50	℃	Module surface Note 1
Relative humidity (RH)		≤ 95	%	Ta ≤ 40℃
Note 2		≤ 85	%	40℃ < Ta ≤ 50℃
Absolute humidity Note 2		Absolute humidity shall not exceed Ta=50℃, RH=85%.	g/m³	Ta > 50℃

Note 1: Measured at the display area
Note 2: No condensation

9. ELECTRICAL CHARACTERISTICS

(1) Logic/ LCD driving

Ta = 25℃

Parameters	Symbols	Min.	Typ.	Max.	Unit	Remarks
Supply voltage	VCC	3.0	3.3	3.6	V	-------
Ripple voltage	Vrp	—	—	100	mV	for VCC
LVDS signal input "L" voltage	ViL	-100	—	—	mV	VCM=1.2V VCM: Common mode voltage in LVDS driver
LVDS signal input "H" voltage	ViH	—	—	+100	mV	
Terminating resistor	Rt	—	100	—	Ω	—
Supply current	ICC	—	(TBD) Notes 1	(TBD) Notes 2	mA	VCC=3.3V

Notes 1: Checker flag pattern (in EIAJ ED-2522)
Notes 2: 2H1V Checker flag pattern

(2) Backlight

Ta = 25℃

Parameters	Symbols	Min.	Typ.	Max.	Unit	Remarks
Lamp current	IL	2.0	5.0	6.0	Marms	200 cd/cm^2
Lamp voltage	VL	—	685	—	Vrms	IL=5.0 mArms
Lamp turn on voltage	VS	1300	—	—	Vrms	Ta = 0℃ Note 1
		900	—	—	Vrms	Ta = 25℃ Note 1
Oscillator frequency	Ft	50	60	—	KHz	Note 2

Note 1: When VS is less than Min. value, lamps are not turned on.

Note 2: Recommended value of "Ft" th: Hsync period

- Ft is within the specification. n: a natural number (1,2,3,・・・・)
- $Ft = \frac{1}{4th} \times (2n-1)$

If Ft is out of the recommended value, interface between Ft frequency and Hsync frequency may cause beat on the display.

10. POWER SUPPLY SEQUENCE

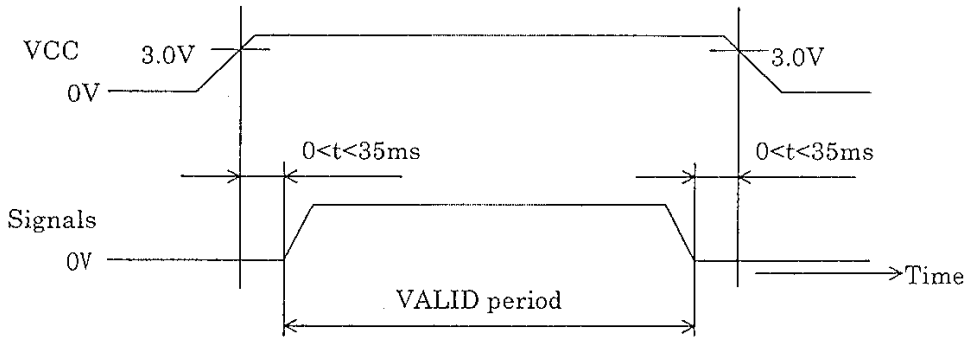

*1 The supply voltage for input signals should be the same as VCC.
*2 Apply VDDB within the LCD operation period. When the backlight turns on before LCD operation or the LCD operation turns off before the backlight turns off, the display may momentarily become white.
*3 When the power is off, please keep whole signals (Hsync, Vsync, CLK, DE, Data) low level or high impedance.

11. INTERFACE PIN CONNECTIONS

(1) Interface connector for signal and power

Part No. : FI-SEB20P-HF
Adaptable socket : FI-SE20S
Supplier : Japan Aviation Electronics Industry Limited (JAE)

CN1

Pin No.	Symbols	Signal type	Function
1	D3+	Pixel data etc.	LVDS differential data input Notes 2 (In case of 6bit mode, connected to GND)
2	D3-		
3	DPS	Display scan select	"L": normal "H":reverse
4	86SEL	8bit(6bit+FRC mode)/6bit select	"L":6bit mode "H":8bit(6bit +FRC)mode
5	GND	Ground	Notes 1
6	CK+	Pixel clock	CLK for pixel data f=65MHz (typ.) (LVDS level) Notes 2
7	CK-		
8	GND	Ground	Notes 1
9	D2+	Pixel data etc.	LVDS differential data input Notes 2
10	D2-		
11	GND	Ground	Notes 1
12	D1+	Pixel data etc.	LVDS differential data input Notes 2
13	D1-		
14	GND	Ground	Notes 1
15	D0+	Pixel data etc.	LVDS differential data input Notes 2
16	D0-		
17	GND	Ground	Notes 1
18	GND		
19	VCC	Power supply	Supply +5.0V±0.25V or +3.3V±0.3V
20	VCC		

Note 1: GND for logic and LCD driving. GND should be connected to system ground.
GND is connected to frame.
Note 2: Use 100Ω twist pair wires for the cable
Remark: Connect all terminals (except 3,4) to avoid noise issue.

CN1 :Figure from socket view

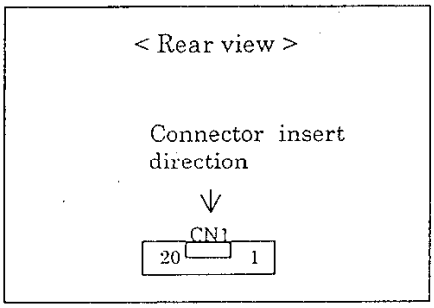

(2) Connector for backlight unit

Part No. : BHR-03VS-1
Adaptable socket :
Supplier : J.S.T. TRADING COMPANY, LTD.

CN2

Pin No.	Symbols	Function
1	VH	High voltage terminal (The cable color is white)
2	N.C.	Non conection
3	VL	Low voltage terminal

12. METHOD OF CONNECTION FOR LVDS chip

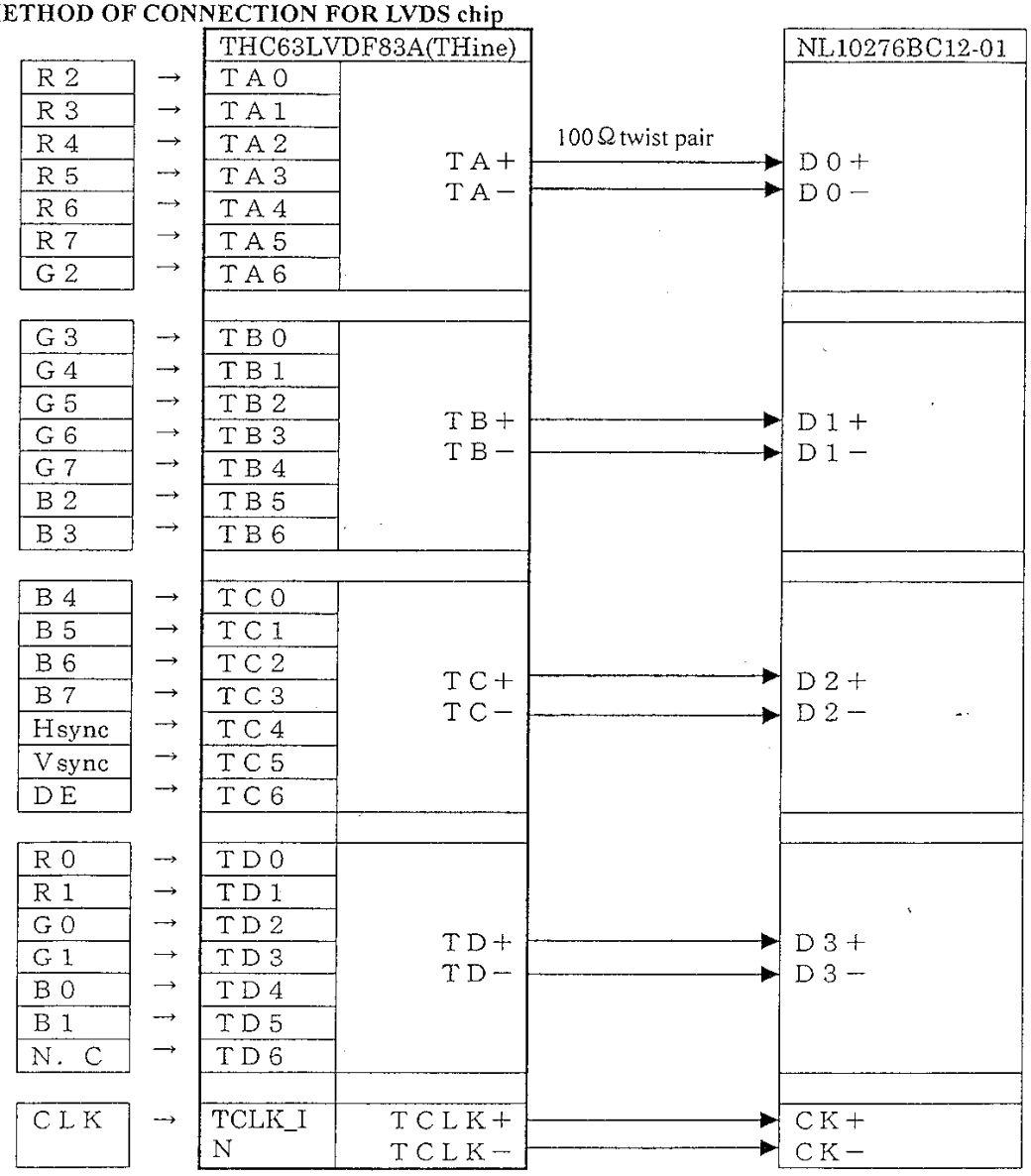

Notes : These signals should be kept in the specified range of **14.INPUT SIGNAL TIMINGS.**

13. DISPLAY COLORS vs INPUT DATA SIGNALS

(TBD)

14. INPUT SIGNAL TIMINGS

(1) Input signal specification for LCD controller

	Parameters	Symbols	Min.	Typ.	Max.	Unit	Remarks
CLK	Frequency	1/tc	60.0	65.0	68.0	MHz	15.384ns(typ.)
	Duty	tch/tc	0.4	0.5	0.6	—	Note 1
	Rise, fall	Tcrf	—	—	10	ns	Note 1
Hsync	Period	Th	(TBD)	20.676	—	μs	48.363kHz(typ.)
			—	1344		CLK	
	Display period	Thd		1024		CLK	—
	Front-porch	thf *	1	40	—	CLK	—
	Pulse width	Thp *	2	208	—	CLK	—
	Back-porch	Thb *	1	72	—	CLK	—
	* thf + thp + thb		81	320	1000	CLK	—
	Hsync-CLK timing	Ths	2.5	—	—	ns	Note 1
	CLK-Hsync timing	Thh	2.5	—	—	ns	Note 1
	Rise, fall	Thrf	—	—	10	ns	—
Vsync	Period	Tv	—	16.666	(TBD)	ms	60.004Hz(typ.)
				806	—	H	
	Display period	Tvd		768		H	—
	Front-porch	tvf *	1	3	—	H	—
	Pulse width	tvp *	2	—	—	H	—
	Back-porch	tvb *	1	33	—	H	—
	* tvf + tvp + tvb		4	38	—	H	—
	Vsync-Hsync timing	tvs	10	—	—	ns	Note 1
	Hsync-Vsync timing	tvh	1	—	—	CLK	Note 1
	Rise, fall	tvrf	—	—	10	ns	Note 1
DATA	DATA-CLK (Set up)	tds	2.5	—	—	ns	Note 1
	CLK-DATA (Hold)	tdh	2.5	—	—	ns	Note 1
DE	DE-CLK timing	tes	2.5	—	—	ns	—
	CLK-DE timing	teh	2.5	—	—	ns	
	Rise, fall	terf	—	—	10	ns	

Note 1: These values are specified at the inputs of TBD.
(Refer to **12. METHOD OF CONNECTION FOR LVDS chip)**

(2) Definition of input signal timing for LCD controller

<Vertical>

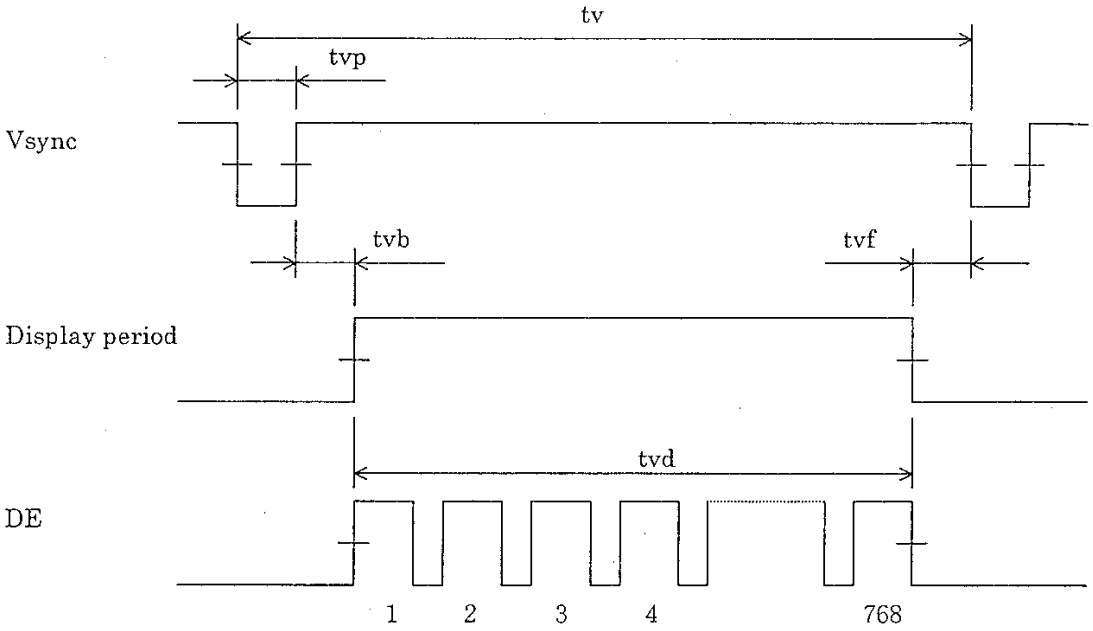

<Horizontal>

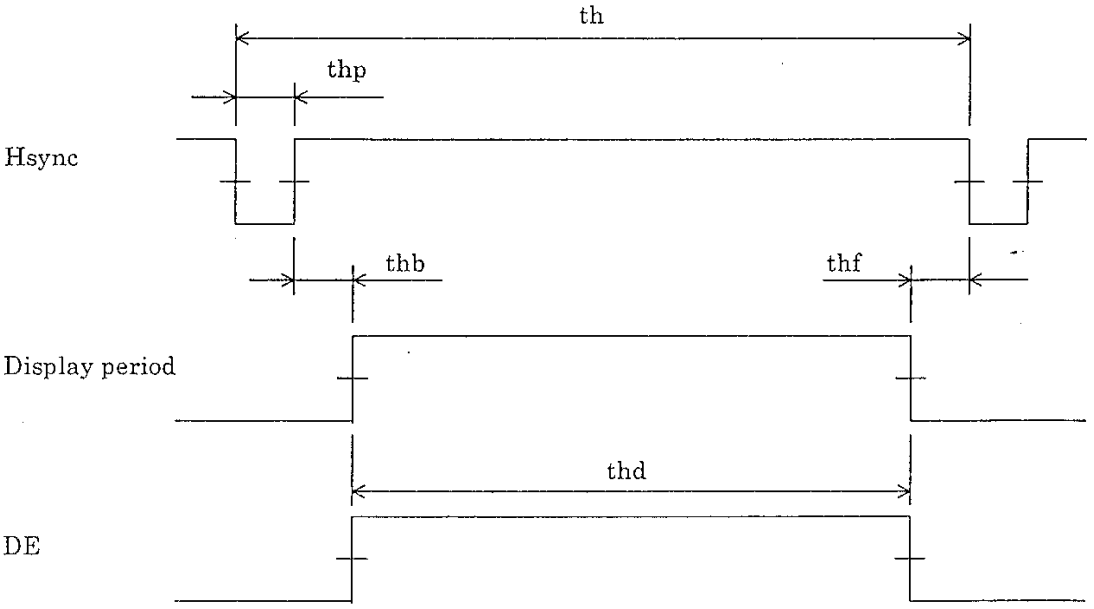

Notes 1: These values are specified at the inputs of TBD
(Refer to **12. METHOD OF CONNECTION FOR LVDS chip**)
Notes 2: "Display period" do not exist as signals.

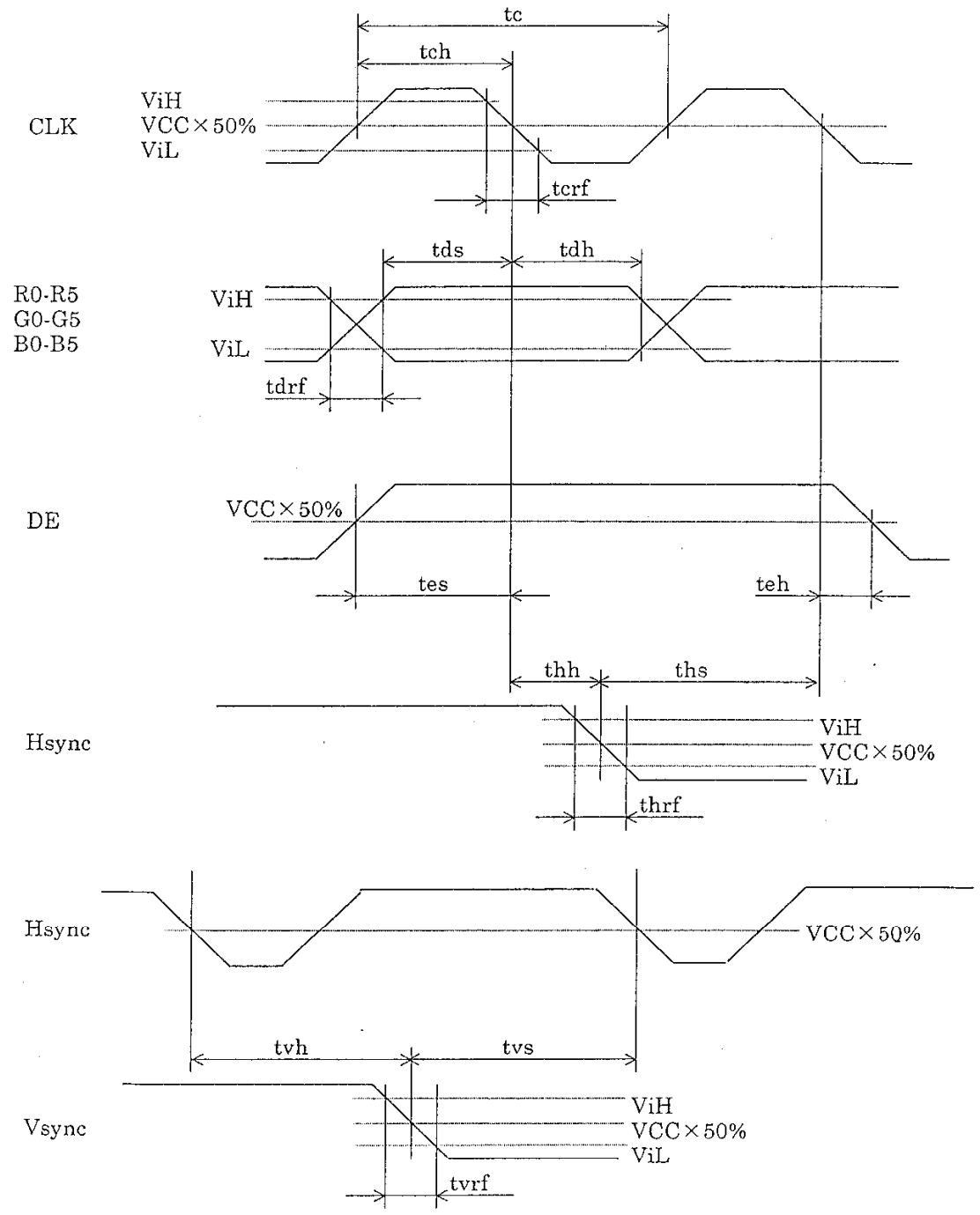

ViH = VCC×0.7(Min.)
ViL = VCC×0.3(Max.)

(3) Input signal timig chart for LCD

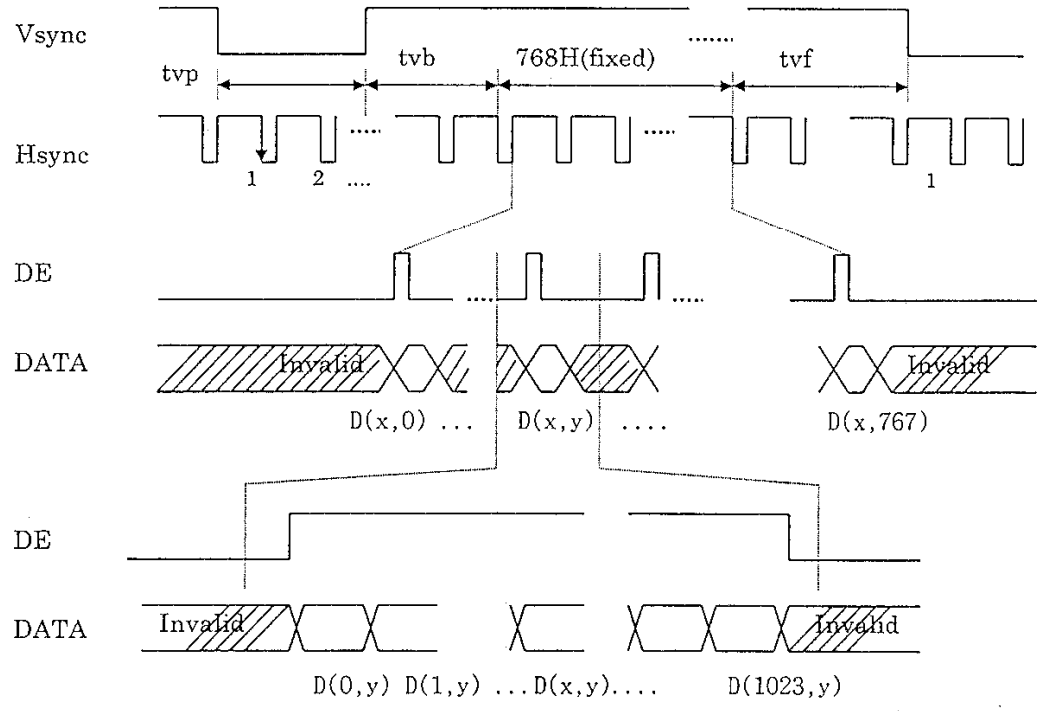

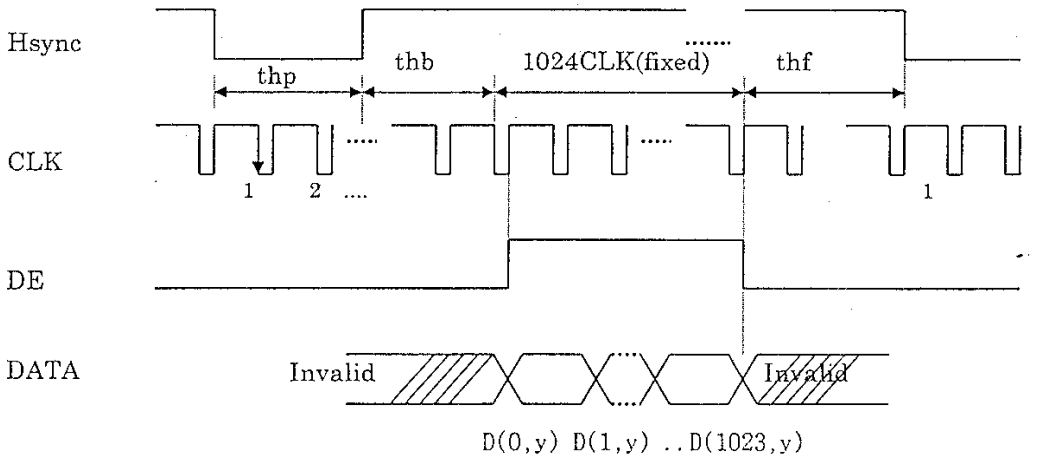

Note 1: These values are specified at the inputs of THC63LVDF63A.
(Refer to **12. METHOD OF CONNECTION FOR LVDS chip).**

(4) Display position of input data

(DPS = "L")

D(0, 0)	D(1, 0)	•••	D(X, 0)	•••	D(1023, 0)
D(1, 0)	D(1, 1)	•••	D(X, 1)	•••	D(1023, 1)
• • •	• • •	• ••• •	• • •	• ••• •	• • •
D(0, Y)	D(1, Y)	•••	D(X, Y)	•••	D(1023, Y)
• • •	• • •	• ••• •	• • •	• ••• •	• • •
D(0,767)	D(1,767)	•••	D(X,767)	•••	D(1023,767)

(DPS = "H")

D(1023,767)	D(1022, 767)	•••	D(X, 767)	•••	D(0, 767)
D(1023,766)	D(1022, 766)	•••	D(X, 766)	•••	D(0, 766)
• • •	• • •	• ••• •	• • •	• ••• •	• • •
D(1023,Y)	D(1022,Y)	•••	D(X,Y)	•••	D(0,Y)
• • •	• • •	• ••• •	• • •	• ••• •	• • •
D(1023,0)	D(1022,0)	•••	D(X,0)	•••	D(0,0)

15. FOR LVDS RECEIVER

(1) Input signal specifications

Parameters	Symbols	min.	typ.	max.	Unit	Remarks
CLK Frequency	tCK	14.71	15.38	16.66	ns	—
Bit0 position	tb0	—	0	—	ns	—
Bit1 position	tb1	—	1/7tck	—	ns	—
Bit2 position	tb2	—	2/7tck	—	ns	—
Bit3 position	tb3	—	3/7tck	—	ns	—
Bit4 position	tb4	—	4/7tck	—	ns	—
Bit5 position	tb5	—	5/7tck	—	ns	—
Bit6 position	tb6	—	6/7tck	—	ns	—
—	SKRM	490	—	—	ps	—

Note: See the specifications of LVDS manufactures for detailed design.

(2) Input signal timing chart

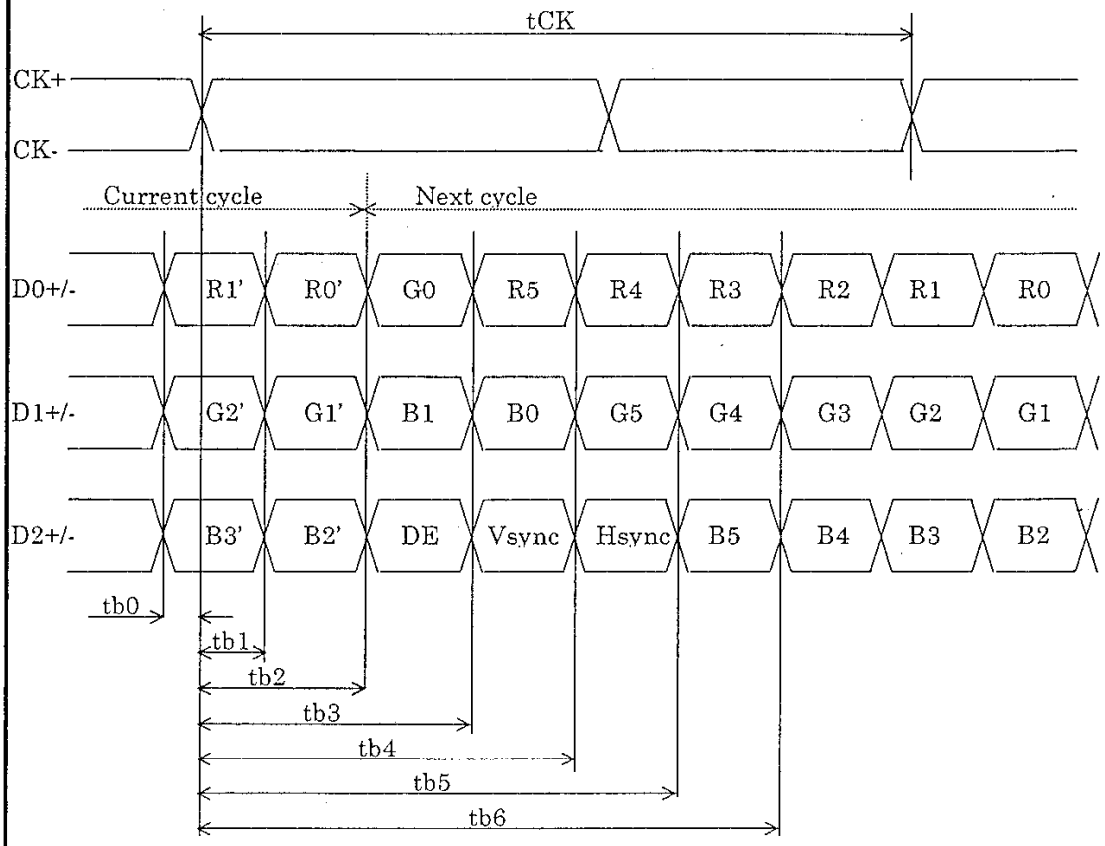

16. OPTICAL CHARACTERISTICS

(Ta = 25℃, VCC = 3.3V,IL = 5.0 mArms)

Items	Symbols	Condition		Min.	Typ.	Max.	Unit	Remarks
Contrast ratio	CR	θR=0°, θL=0°, θU=0°,θD=0° White／Black, at center		(TBD)	200	—	—	Note 1
Luminance	Lvmax	White, at center (IL=5.0 mArms)		(TBD)	200	—	cd/m^2	Note 2
Luminance uniformity	—	White		—	—	1.40	—	Note 3
Chromaticity coordinate	—	White (x,y), at center	x		(TBD)		—	Note 2
			y		(TBD)			

Reference data

(Ta = 25℃, VCC = 3.3V, IL = 5.0 mArms)

Items	Symbols	Condition	Min.	Typ.	Max.	Unit	Remarks
Color gamut	C	θR=0°, θL=0°,θU=0°, θD=0° at center, to NTSC	(TBD)	(60)	—	%	—
Viewing angle range (CR > 10) White／Black, at center	θ R	θU=0°, θD=0°	(TBD)	(50)	—	deg.	Note 4
	θ L	θU=0°, θD=0°	(TBD)	(50)	—	deg.	
	θ U	θR=0°, θL=0°	(TBD)	(30)	—	deg.	
	θ D	θR=0°, θL=0°	(TBD)	(45)	—	deg.	
Response time	Ton	White to Black	—	20	40	ms	Note 5
	Toff	Black to White	—	(TBD)	(TBD)		

Note 1: The contrast ratio is calculated by using the following formula.

$$\text{Contrast ratio (CR)} = \frac{\text{Luminance with all pixels in "white"}}{\text{Luminance with all pixels in "black"}}$$

Note 2: The luminance is measured after 20 minutes from the module works, with all pixels in "white". The typical value is measured after luminance saturation, more than one hour after burn-in.

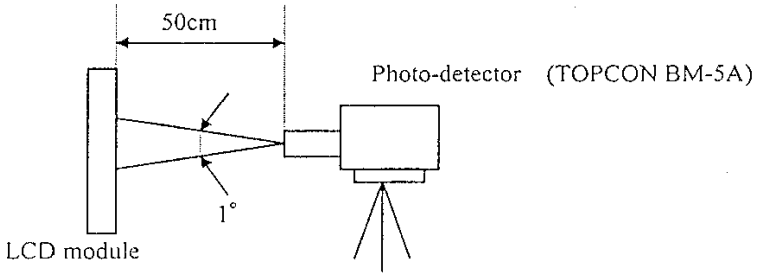

Note 3: Luminance uniformity is calculated by using the following formula.

$$\text{Luminance uniformity} = \frac{\text{Maximum luminance}}{\text{Minimum luminance}}$$

The luminance is measured at near the five points shown below.

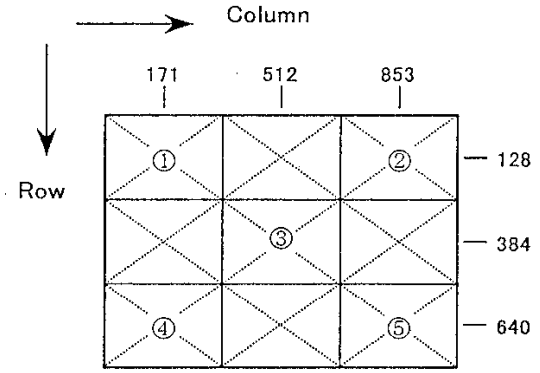

Note 4: Definitions of viewing angle are as follows.

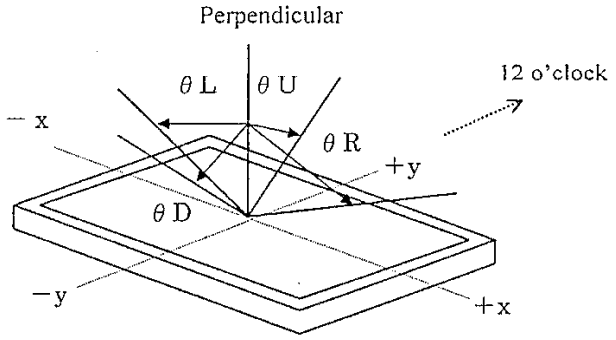

Note 5: Definitions of response time is as follows.
Photo-detector output signal is measured when the luminance changes "white" to "black" or "black" to "white".

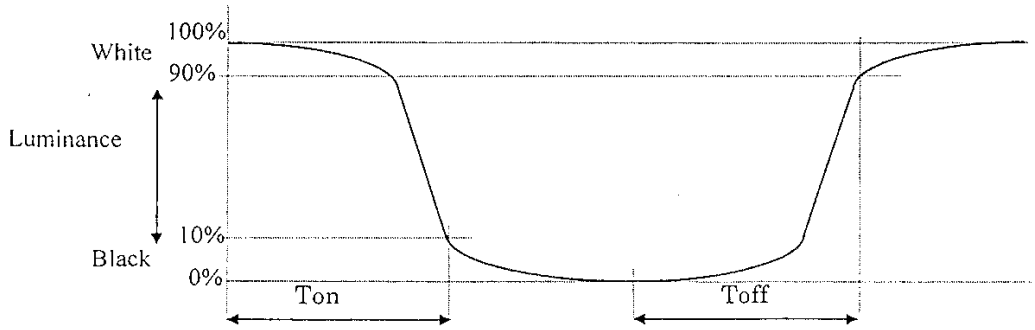

17. RELIABILITY TEST

Test items	Test condition	Judgment
High temperature/humidity operation	50±2℃, RH= 85% 240 hours, Display data is white.	*1
Heat cycle (operation)	① 0℃±3℃・・・1 hour 55℃±3℃・・・1 hour ② 50 cycles , 4 hours/cycle ③ Display data is white.	*1
Thermal shock (non-operation)	① -20℃±3℃・・・30 minutes 60℃±3℃・・・30 minutes ② 100 cycles ③ Temperature transition time is within 5 minutes.	*1
Vibration (non-operation)	① 5-100Hz, 19.6m/s^2 (2G) 1 minute/cycle, X,Y,Z direction ② 120 times each direction	*1, *2
Mechanical shock (non-operation)	① 490m/s^2 (50G), 11ms X,Y,Z direction ② 5 times each direction	*1, *2
ESD (operation)	150pF, 150Ω, ±10KV 9 places on a panel *3 10 times each place at one-second intervals	*1
Dust (operation)	15 kinds of dust (JIS-Z 8901) Hourly 15 seconds stir, 8 times repeat	*1

*1: Display function is checked by the same condition as LCD module out-going inspection.

*2: Physical damage

*3: Discharge points are shown in the figure.

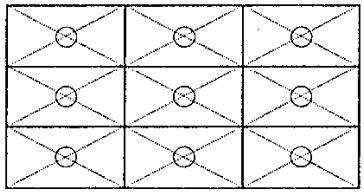

18. GENERAL CAUTIONS

Because next figures and sentences are very important, please understand these contents as follows.

⚠ **CAUTION**	This figure is a mark that you will get hurt and/or the module will have damages when you make a mistake to operate.

This figure is a mark that you will get hurt when you make a mistake to operate.

⚠ CAUTIONS

(1) A caution when taking out the module

① Pick a pouch only, when taking out the module from the carrier box.

(2) Cautions for handling the module

① As the electrostatic discharges may break the LCD module, handle the LCD module with care against electrostatic discharges. Peel protection sheet out from the LCD panel surface as slowly as possible.

② As the LCD panel and backlight element are made from fragile glass material, impulse and pressure to the LCD module should be avoided.

③ As the surface of polarizer is very soft and easily scratched, use a soft dry cloth without chemicals for cleaning.

④ Do not pull the interface connectors in or out while the LCD module is operating.

⑤ Put the module display side down on a flat horizontal plane.

⑥ Handle connectors and cables with care.

⑦ When the module is operating, do not lose CLK, Hsync, or Vsync signal. If any one or more of these signals is lost, the LCD panel would be damaged.

⑧ The torque for mounting screws should never exceed 0.2 N·m (2.0 kgf·cm).

⑨ The LCD module should be mounted in strong body such as magnesium alloy. If the press or twist are added to the module, the display may have un-uniformity image. When the module is mounted to customer chassis, please evaluate the display condition carefully.

(3) Cautions for the atmosphere

① Dew drop atmosphere must be avoided.

② Do not store and/or operate the LCD module in high temperature and/or high humidity atmosphere. Storage in an Electro-conductive polymer-packing pouch and in relatively low temperature atmosphere is recommended.

③ This module uses cold cathode fluorescent lamp. Therefore, The lifetime of lamp becomes short conspicuously at low temperature.

④ Do not operate the LCD module in high magnetic field.

(4) Caution for the module characteristics

① Do not any apply fixed patterns data signals to the LCD module at product aging. Applying fixed pattern for a long time may cause image sticking.

(5) Other cautions

① Do not disassemble and/or reassemble LCD module.

② Do not readjust variable resistors nor switches etc.

③ When returning the module for repair or etc., pack the module not to be broken. We recommend the original shipping packages.

Liquid Crystal Display has the following specific characteristics. These are not defects nor malfunctions.

The ambient temperature may affect the display condition of the LCD module.
The LCD module uses cold cathode tube for backlighting. Optical characteristics, like luminance or uniformity, will change during time.

Uneven brightness and/or small spots may be noticed depending on different display patterns.

19.OUTLINE DRAWING

(Unit: mm)

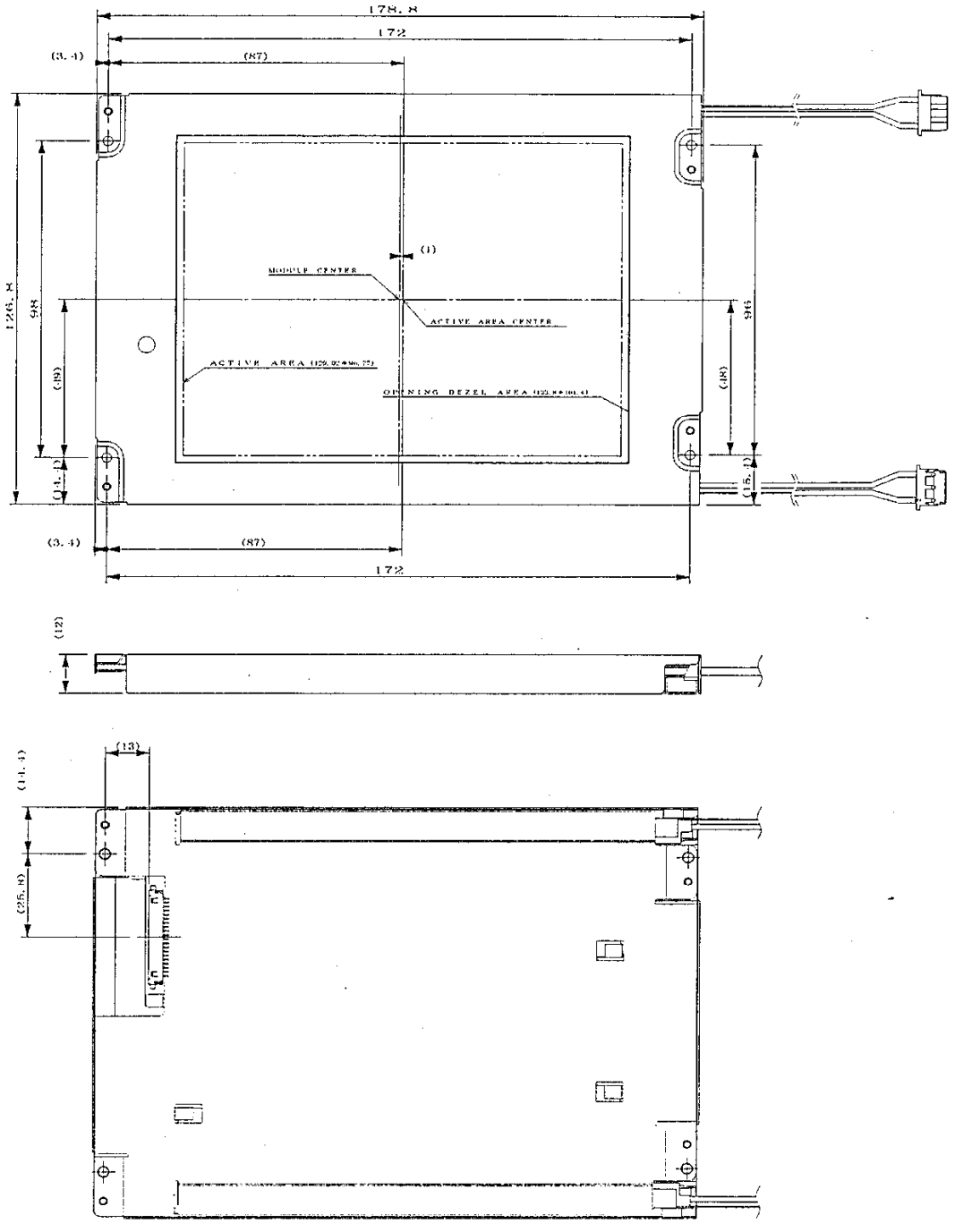

2000. 4. 21

Revision History					DOD-H-7914	25/25
Rev.	prepared date	Revision contents	Approved	Checked	Prepared	Issued date
1	5 June, 2000	DOD-H-7914	T Takh	—	Y. Horie	—